APPLICATION SPECIFICATION

1.0 SCOPE

1.1 CONTENT

This specification covers the requirements of the Molex L.F.H. Plug and Receptacle cable assemblies

1.2 REFERENCE SPECIFICATIONS

For applicable performance requirements refer to Molex specifications PS-70928

1.3 APPLICABLE SALES DRAWINGS:

SDA-70929-20**	CONNECTOR SUB-ASSEMBLY PLUG – 60 ckt
SDA-71720-*000	CONNECTOR SUB-ASEMBLY PLUG – 80 ckt
SDA-71691-0003	CONNECTOR SUB-ASEMBLY RECEPTACLE – 60 ckt
SDA-70984-100*	INSERT MOLDED TERMINAL ASSEMBLY (MALE) – 60 ckt
SDA-71477-****	INSERT MOLDED TERMINAL ASSEMBLY (MALE) – 80 ckt
SDA-70985-100*	INSERT MOLDED TERMINAL ASSEMBLY (FEMALE) – 60 ckt
SDMS-71245-2000	EMI SHIELD KIT – 60 ckt
SDMS-71245-3000	EMI SHIELD KIT – 60 ckt
SDMS-71723-000*	EMI SHIELD KIT – 80 ckt

2.0 PRODUCT DESCRIPTION

2.1 INSERT MOLDED STICK ASSEMBLY

See Sales Drawing# SDA-70984-100* - For 15 ckt sticks
SDA-71477-**** - For 20 ckt sticks

Standard Option:

(15 ckt stick For 60ckt connector)

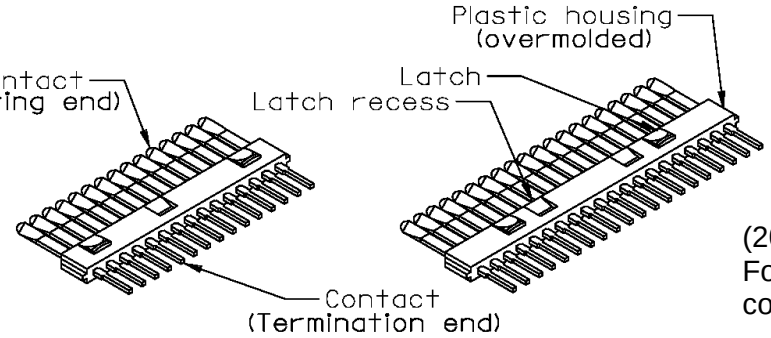

(20 ckt stick For 80 ckt connector)

See Sales Drawing# SDA-70985-100*

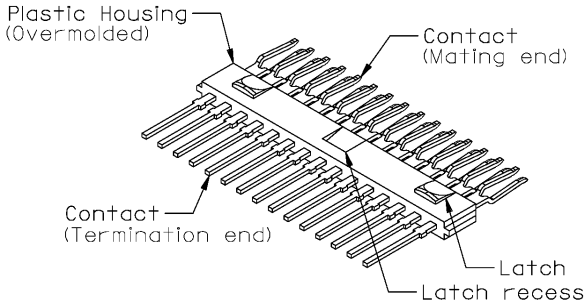

REVISION:	ECR/ECN INFORMATION:	TITLE:	SHEET No.
A	EC No: UCP2005-2088 DATE: 2005 / 03 / 18	APPLICATION SPECIFICATION 60 AND 80 CKT LFH CABLE ASSEMBLY	1 of 20

DOCUMENT NUMBER:	CREATED / REVISED BY:	CHECKED BY:	APPROVED BY:
AS-70929-001	MIBARRA	BSMART	SMILLER

2.0 PRODUCT DESCRIPTION (CONT'D)

Busbar Option:
(15 ckt shown)

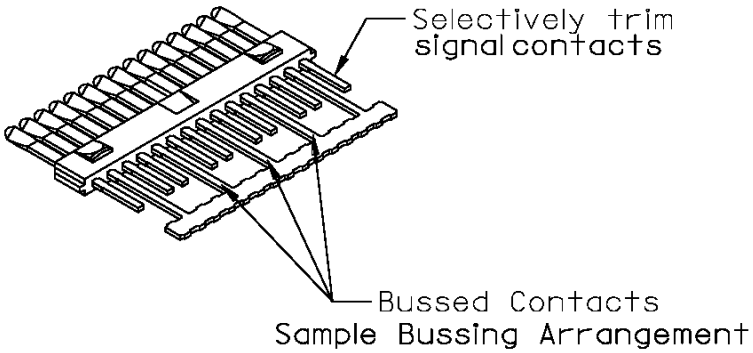

Options shown applies for all sizes
See sheet 14 for Application tooling

2.2 HOUSING/SHIELD SUB-ASSEMBLY

See Sales Drawing# SDA-71720-*000 and SDA-70929-20**

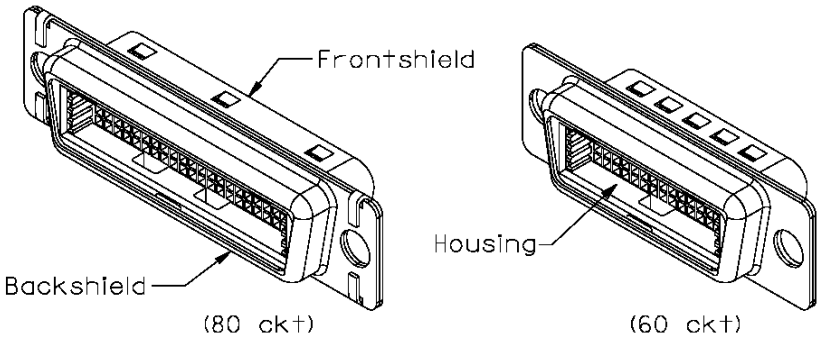

71720 70929

See Sales Drawing# SDA-71691-0003

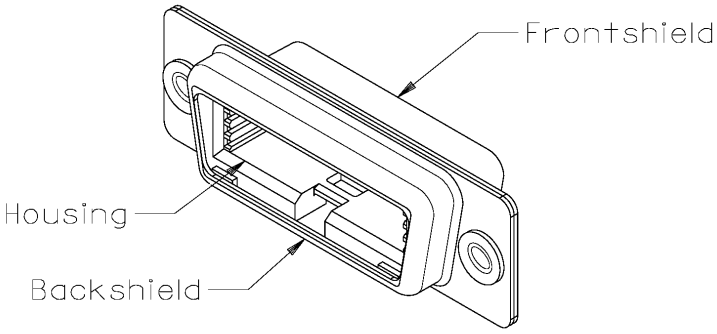

2.0 PRODUCT DESCRIPTION (CONT'D)

2.3 EMI SHIELD AND FERRULE FOR OVERMOLDING

EMI Shield Kit

Refer to Molex Drawing #
SDMS-71245-2000 - 60 ckt
SDMS-71245-3000 - 60 ckt
SDMS-71723-000* - 80 ckt

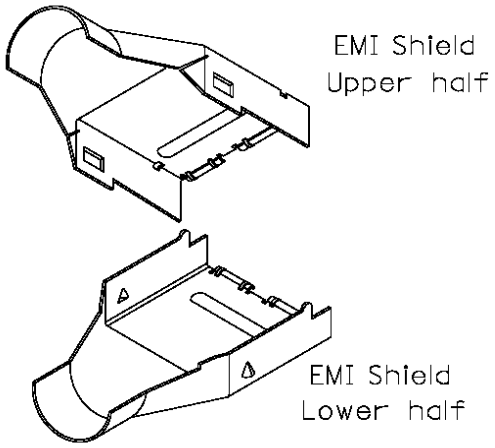

2.4 METAL BACKSHELL SUB-ASSEMBLY FOR 60 CKT ONLY, NOT SUPPLIED BY MOLEX.

Standard 15-pin D-sub backshell fits the 60 ckt LFH
(Contact Factory for suggested sources.)

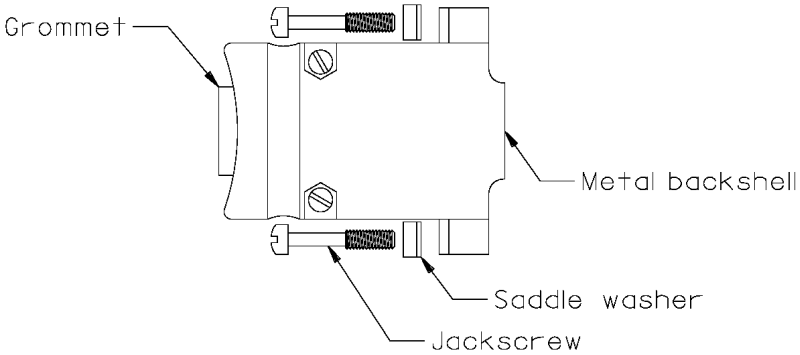

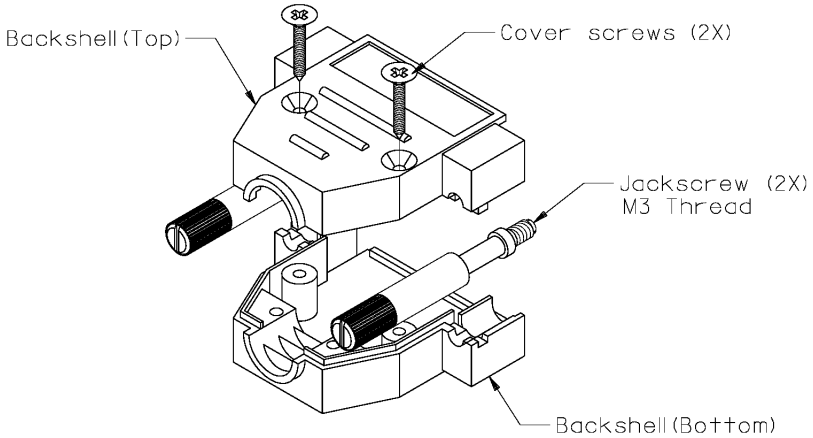

3.0 REQUIREMENTS

3.1 WIRE

Wire shall be specified as follows:

CONDUCTOR	INSULATION DIA.
28 AWG STRANDED .0126” DIA.	.031”±.0015”
30 AWG STRANDED .0100” DIA.	.024”±.0015”

NOTE: Contact Molex for application of other wires

4.0 SUGGESTED APPLICATION TOOLING DEVELOPED BY MOLEX

4.1 STICK PREPERATION UNIT FOR 60 AND 80 CKT

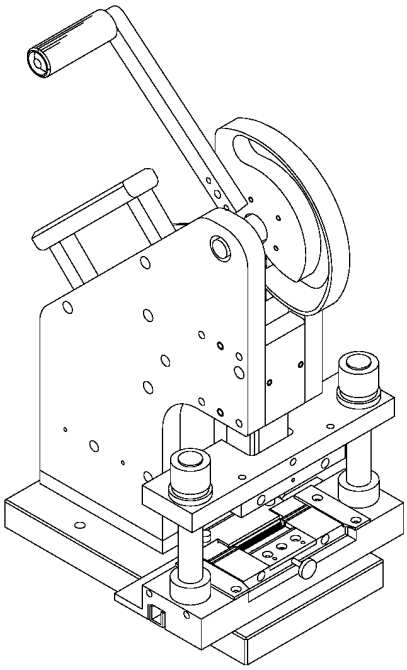

Manual Press for Stick Preparation
Order number for tooling only: 62200-1100
Order number for basic press: 11-31-6356

For further information, contact factory representative

5.0 TERMINATION PROCEDURE

5.1 CONTACT CUT-OFF DETAIL (BUSBAR OPTION)

15 ckt Insert Shown As Example

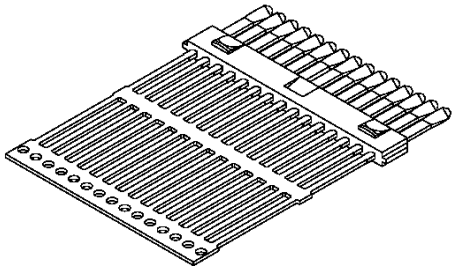

As Purchased: See Sales Drawings
SDA-70984-100*
SDA-71477-****
SDA-70985-100*

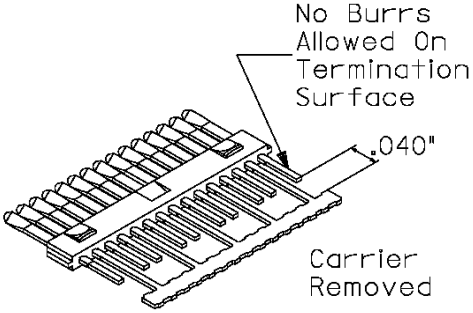

After Trimming
(Sample Bussing
Arrangement Shown)

5.2 WIRE STRIPPING DETAIL – FINSIHED STRIP LENGTH

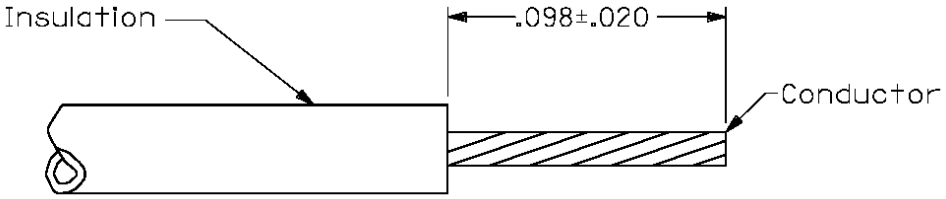

(i) Conductors must be tightly wound
(ii) Nicking of conductors is NOT acceptable

5.3 WELD OR SOLDER CONDUCTOR TO CONTACTS IN DESIRED SEQUENCE.

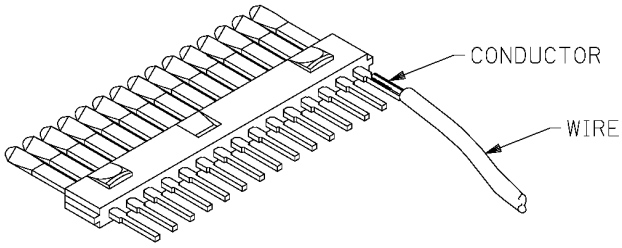

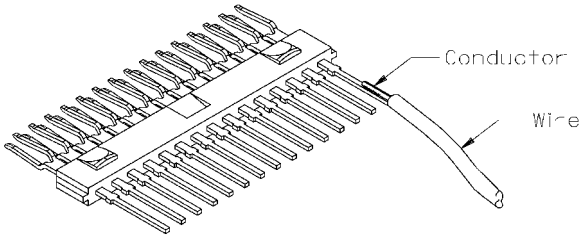

NOTE: Do not damage or bend contact during welding or soldering.

5.0 TERMINATION PROCEDURE (CONT'D)

5.4 WELDING OR SOLDERING DETAIL

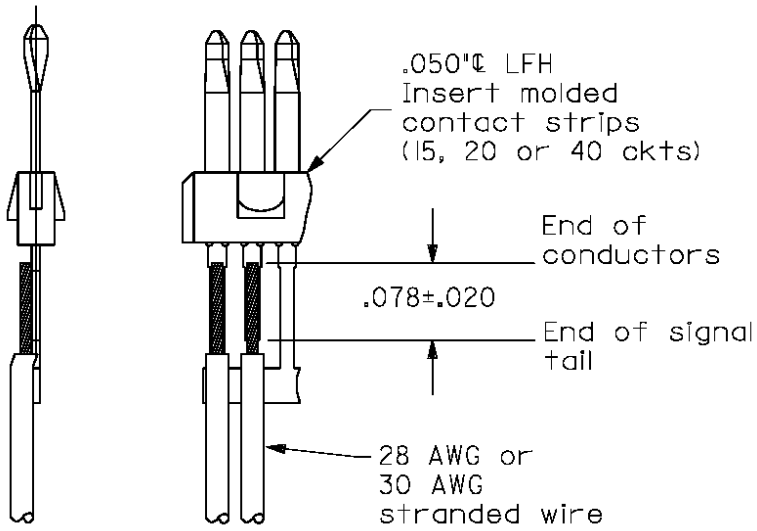

6.0 TERMINATION INSPECTION CRITERIA

6.1 THERE MUST BE NO VISIBLE SEPERATION BETWEEN THE CONDUCTORS AND THE CONTACTS

6.2 THE CONDUCTOR MUST BE CENTERED ON THE CONTACTS. ALIGNMENT BETWEEN THE CONDUCTOR AND THE CONTACT MUST BE WITHIN 10°. ANY PORTION OF THE CONDUCTORS EXTENDING BEYOND A .005" BOUNDARY OF EACH EDGE OF THE CONTACT, IS CAUSE FOR REJECTION.

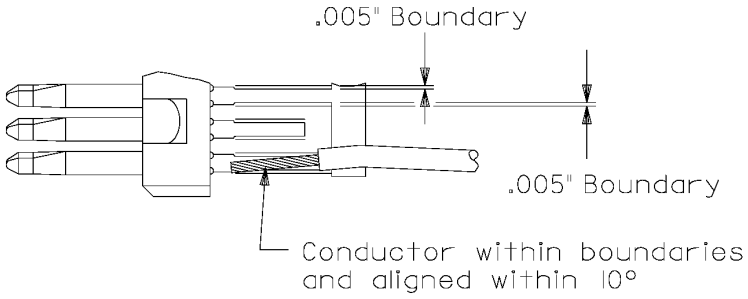

6.3 THE CONDUCTOR MUST NOT BE SMASHED ONTO THE CONTACT. THE OVERALL DIAMETER OF THE CONDUCTOR BUNDLE AFTER TERMINATION SHOULD BE AT LEAST 60% OF THE ORIGINAL DIAMETER.

6.4 <u>WELDING OR SOLDERING CRITERIA</u>: THE FINISHED JOINT SHOULD BE FREE OF DEEP ELECTRODE INDENTATIONS, ELECTRODE DEPOSITS, PITS, CRACKS, STRAND SEPERATION OR ABNORMAL DISCOLORATION

NOTE: Surface appearance is not always a good indicator of weld quality. Insufficient heating or inadequate penetrations, for example, usually leave no visible effects on the work piece.

6.5 CRACKS, SPITTING (FORCIBLE EJECTION OF MATERIAL FROM THE WELD), AND VOIDS ARE NOT PERMITTED.

6.6 SPIKES ON THE TOP SURFACE OF THE WIRE (EVIDENCE OF "TIP PICKUP" OR WELDING OF THE ELECTRODE) ARE CAUSE FOR REJECTION.

6.7 PEEL TEST

The peel strength of each conductor bundle must be greater then 75% of the tensile strength of the undisturbed bundle.

$$A_p = (3 \times S_d) \geq 0.75 \times T_w$$

Where:

A_p = the average peel test value

S_d = the standard deviation of these values

T_w = the tensile strength of the wire

i.e. The mean tensile strength of the samples must be at least 3 standard deviations greater then 75% of the wire's original tensile strength.

6.0 TERMINATION INSPECTION CRITERIA (CONT'D)

6.8 EXAMPLES OF ACCEPTABLE WELD CHARACTERISTICS

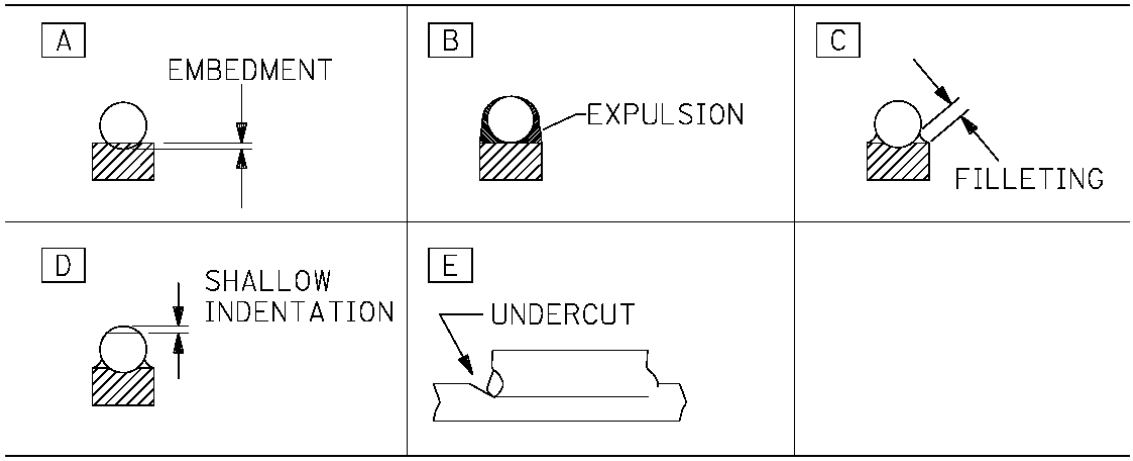

6.9 EXAMPLES OF UNACCEPTABLE WELD CHARACTERISTICS

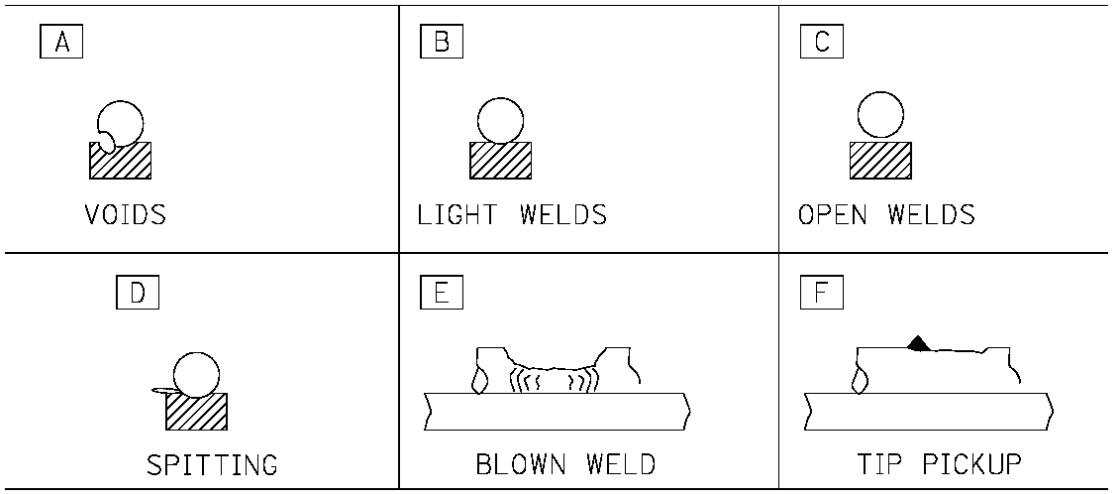

NOTE: THE LIST OF DIAGRAMS IN SECTIONS 6.8 AND 6.9 IS NOT ALL INCLUSIVE

7.0 ASSEMBLY PROCEDURE (15 CKT SHOWN; APPLIES FOR ALL SIZES)

7.1 STACK TERMINATED STICKS AS SHOWN

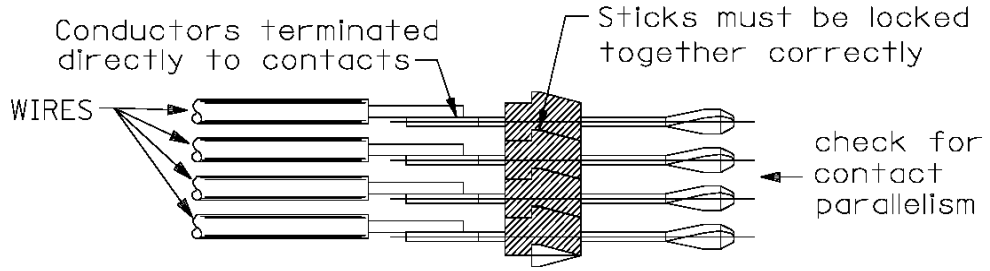

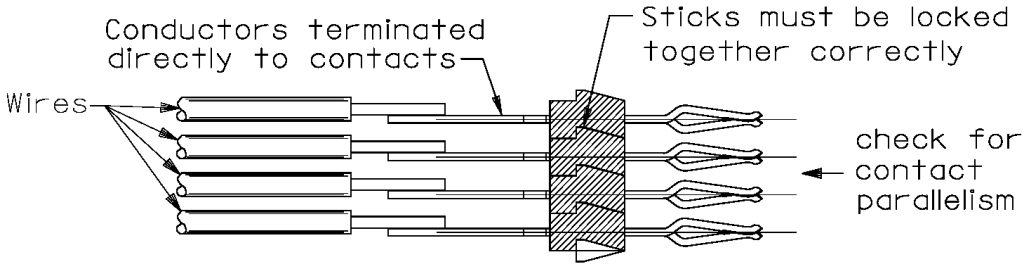

7.2 ASSEMBLE ALL FOUR TERMINATED STICKS TO CONNECTOR SUB-ASSEMBLY IN ONE OPERATION.

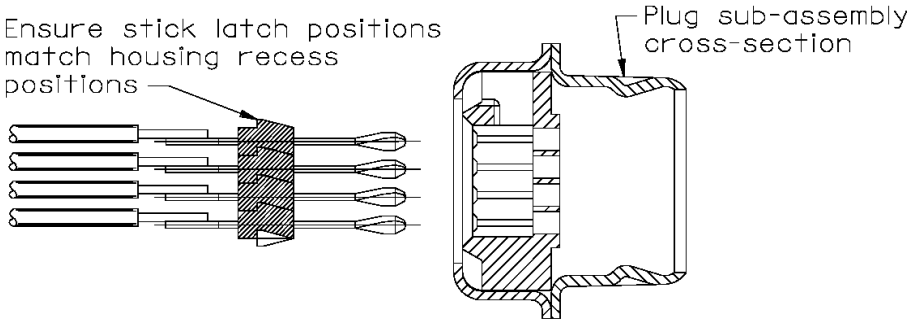

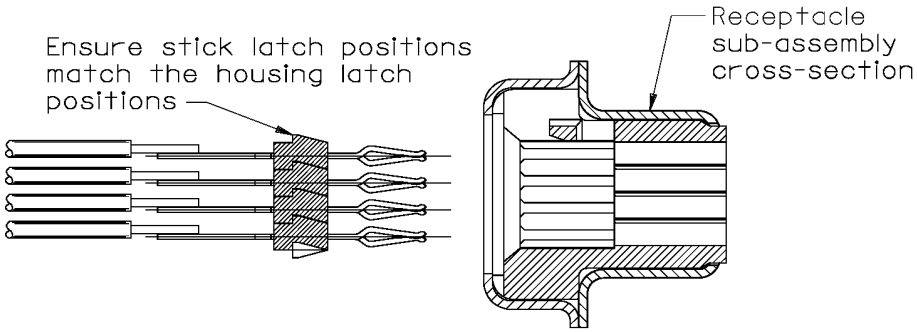

See sheets 10 for application tooling descriptions.

NOTE: Do not assemble sticks to connector one stick at a time

7.0 ASSEMBLY PROCEDURE (CONT'D)

7.3 APPLICATION TOOLING: STICK LOADING UNIT - 60 CKT SHOWN FOR REFERENCE

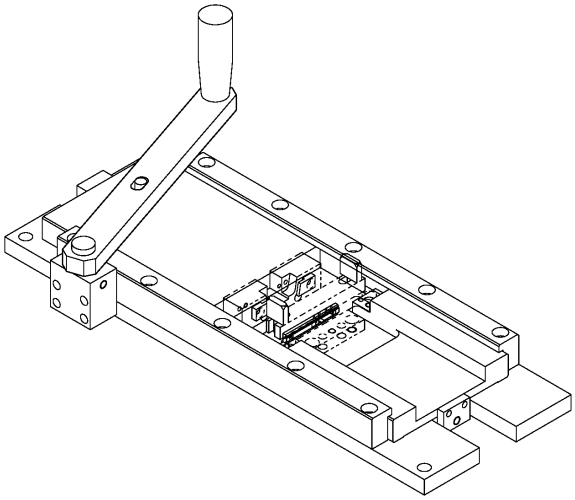

Bench-Mount Press for Stick Loading

Order No.	Description
62200-1600	Base and Tooling
62200-0900	Tooling Only

For further information, contact factory representative.

7.5 ASSEMBLE TERMINATED STICKS TO CONNECTOR SUB-ASSEMBLY

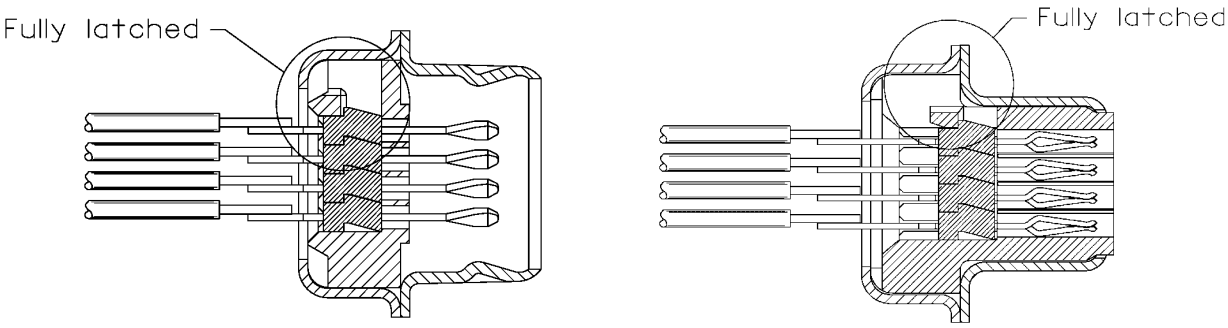

Sectional View of Assembled Connectors

8.0 COMPLETE ASSEMBLY

8.1 CABLE ASSEMBLY USING METAL BACKSHELLS NOT SUPPLIED BY MOLEX.

(60 ckt ONLY)

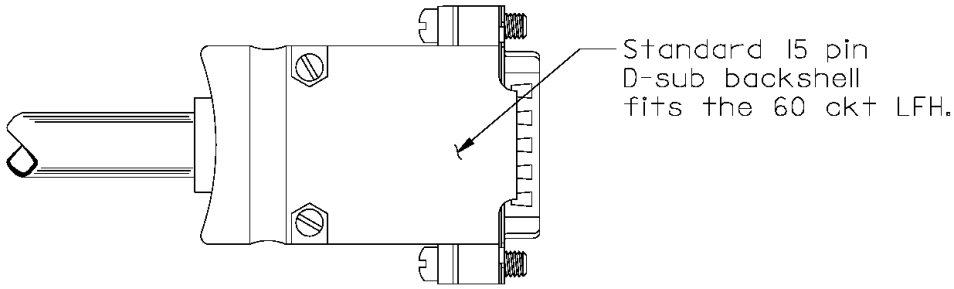

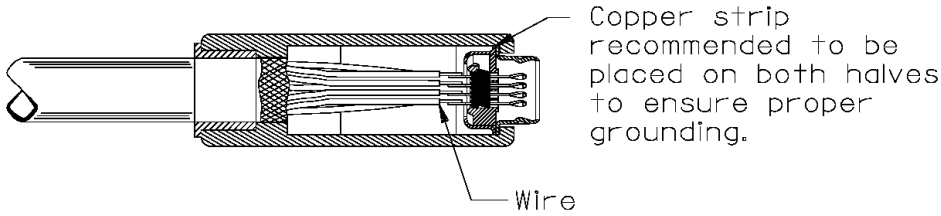

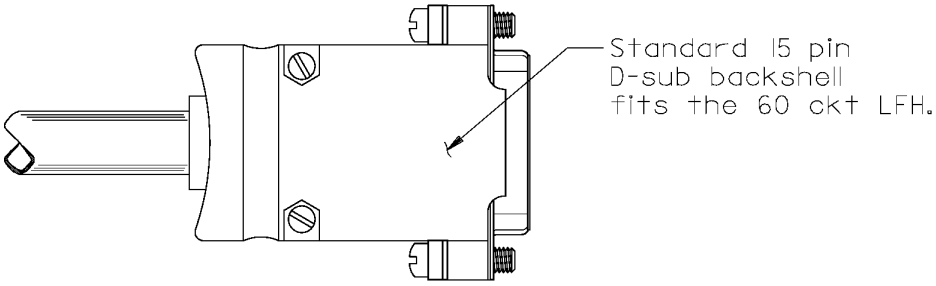

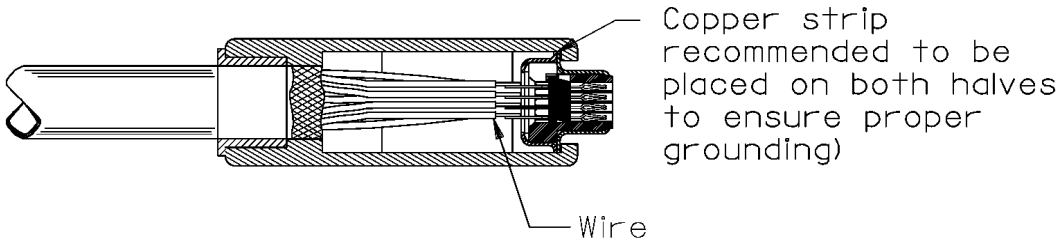

Direct Wire Weld or Solder Termination

8.0 COMPLETE ASSEMBLY (CONT'D)

8.2 CABLE ASSEMBLY USING EMI SHIELDS AND FERRULES.

(60 AND 80 ckt)

PLUG:

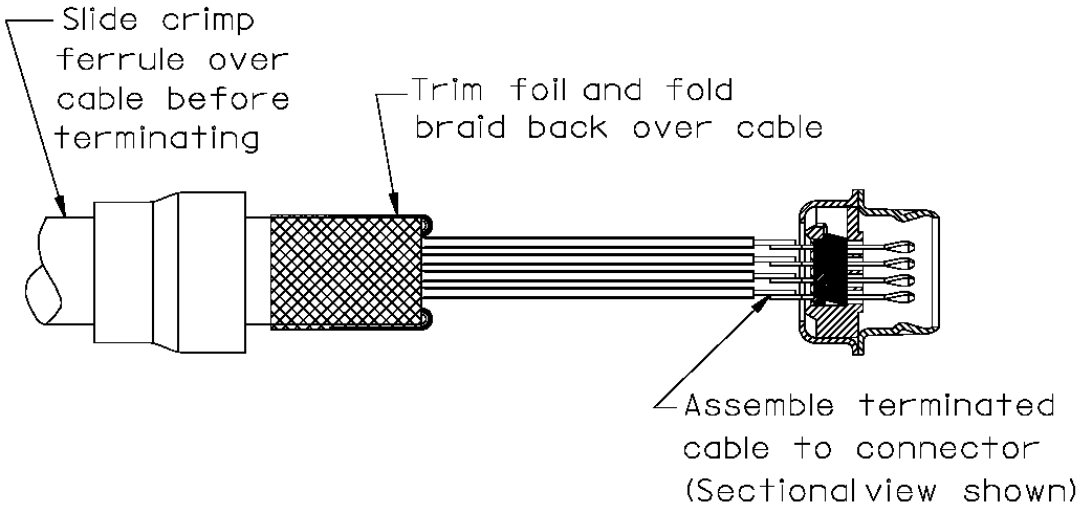

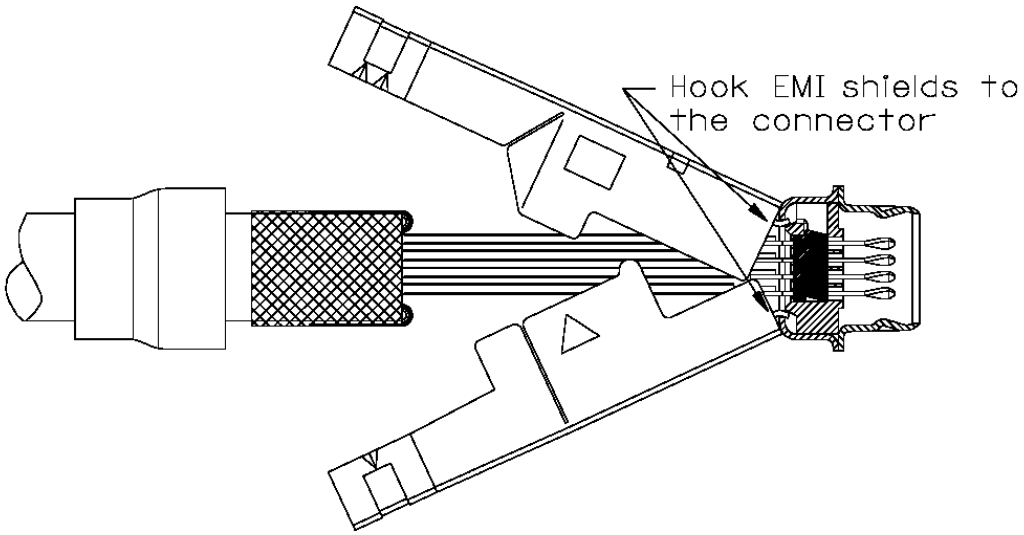

8.0 COMPLETE ASSEMBLY (CONT'D)

RECEPTACLE:

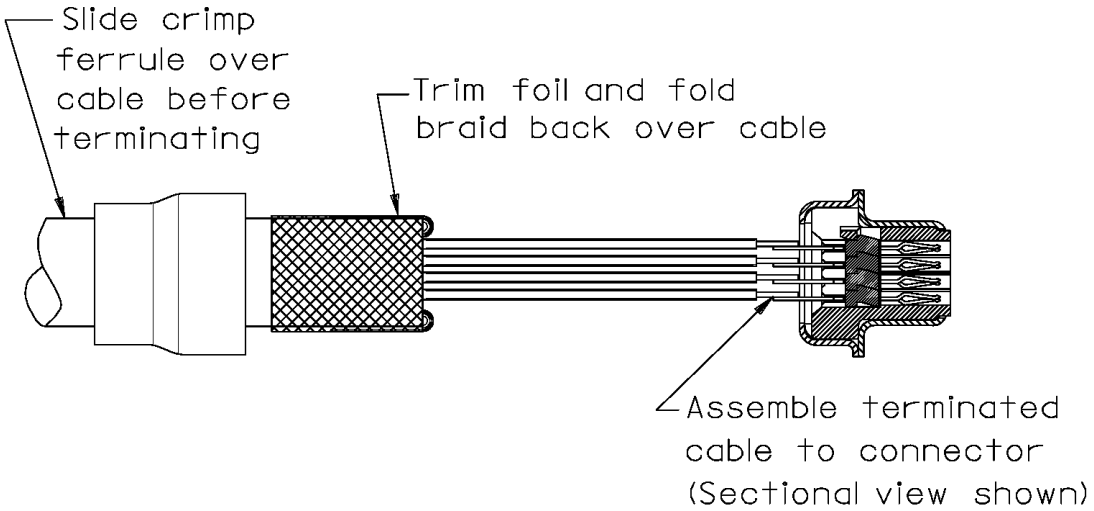

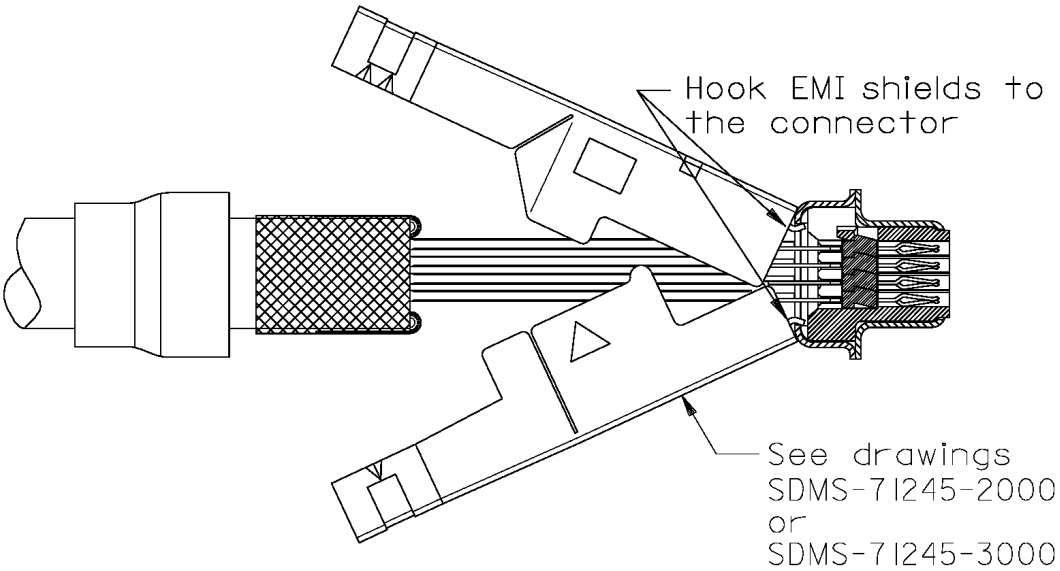

8.0 COMPLETE ASSEMBLY (CONT'D)
8.2 CABLE ASSEMBLY FOR 60 AND 80 CKT

PLUG:

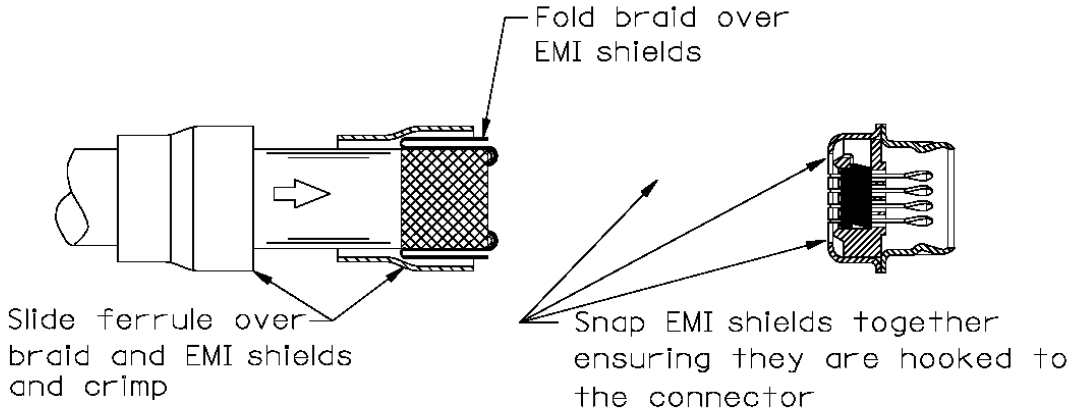

Crimp Details

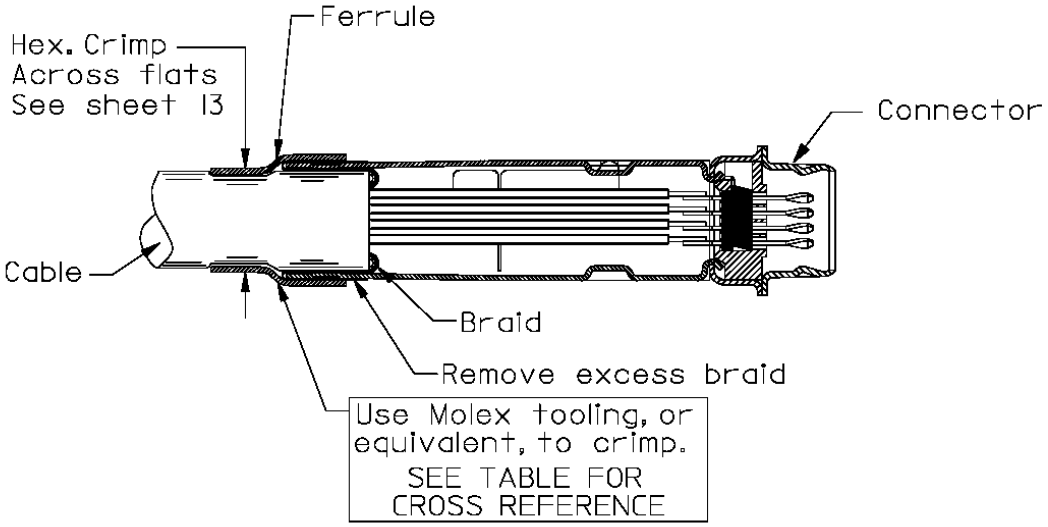

8.0 COMPLETE ASSEMBLY (CONT'D)

RECEPTACLE:

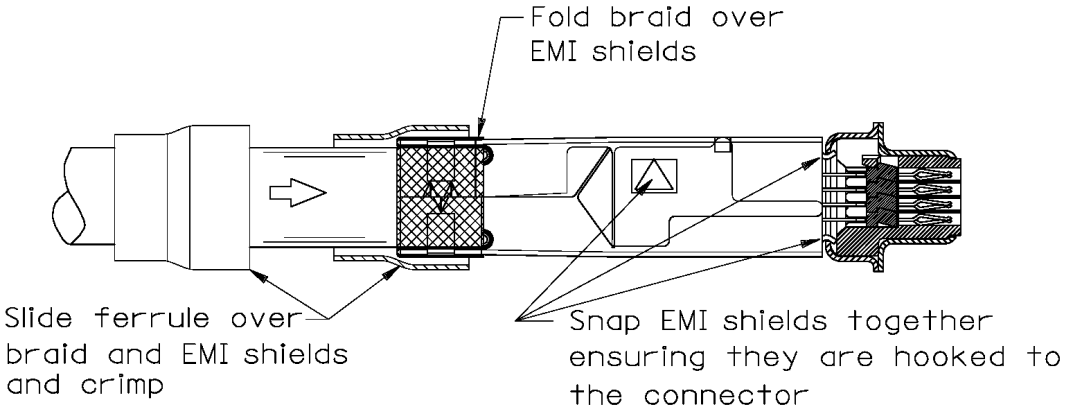

Crimp Details

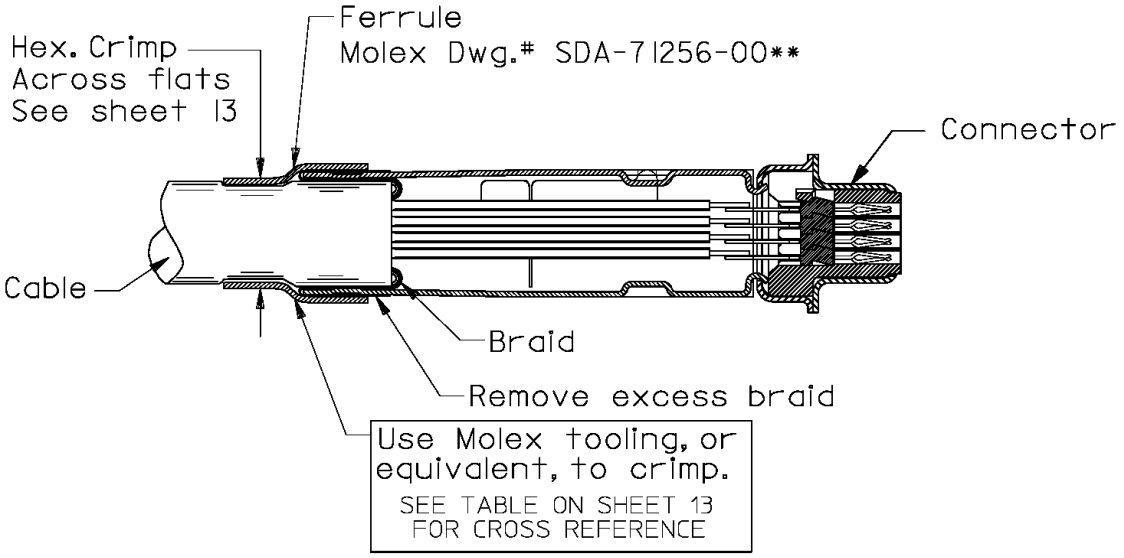

Crimp Die-Set Tooling Cross Reference

CABLE DIA.	.190-.217	.324-.375
HEX. CRIMP ACROSS FLATS	.340±.020	.340±.020
AMP FERRULE #	3-747579-0	3-747579-4

9.0 INSPECTION: PLUG

9.1 TRUE POSITION REQUIREMENTS (Connector Contacts)

(60 ckt shown; applies for all sizes)

CKT SIZE	DIM 'A'	DIM 'B'
60	.700	.994
80	.950	1.228

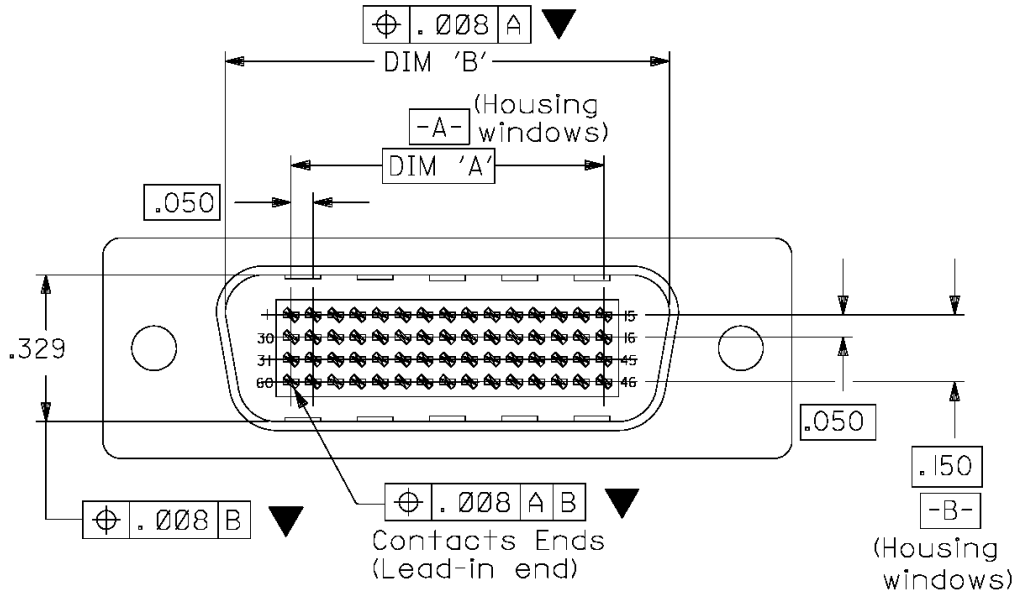

9.2 LATCH REQUIREMENTS

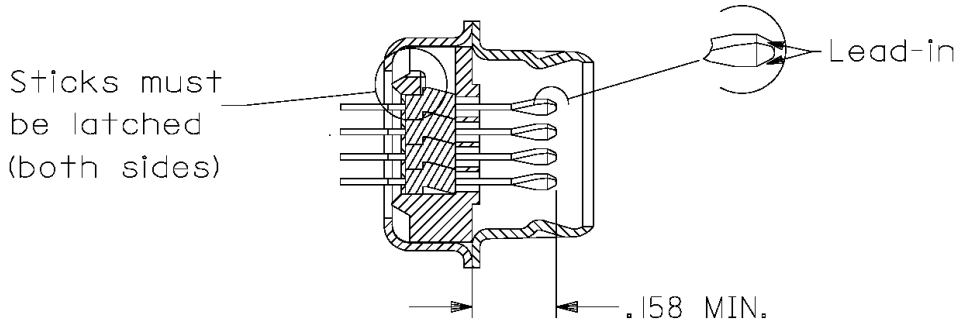

10.0 INSPECTION : RECEPTACLE

10.1 MOLDED STICK VISUAL CHECKS

THE MATING END (GOLD) OF THE STICKS MUST NOT BE DAMAGED IN ANY WAY DURING TRIMING, TERMINATION AND ASSEMBLY PROCESSES

Examples of Unacceptable Conditions

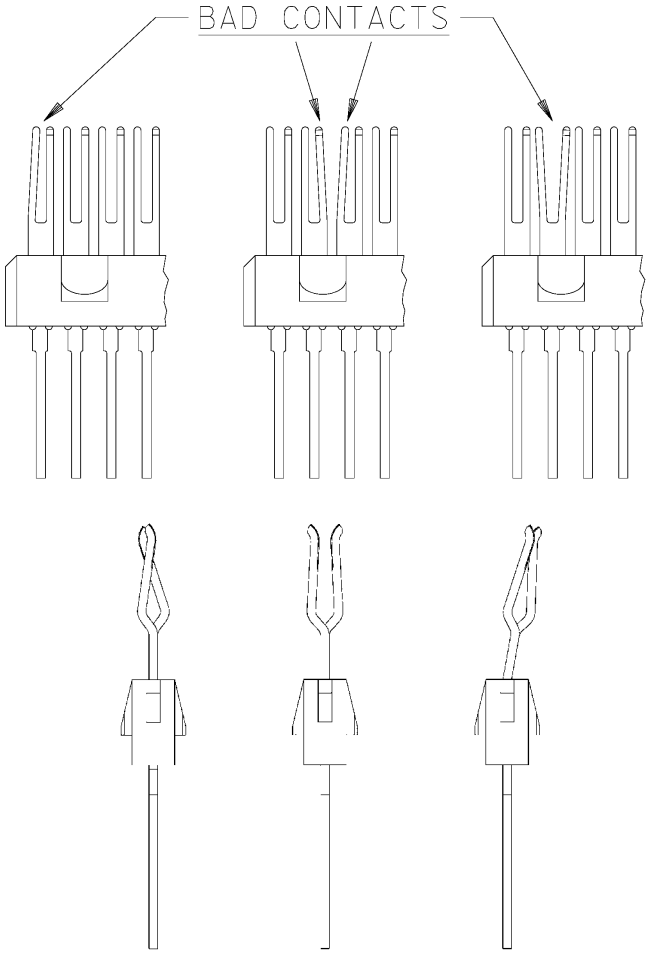

The Above Conditions are some of the Most Common Seen, but not All Possibilities are shown

10.0 INSPECTION: RECEPTACLE (CONT'D)

10.2 MOLDED STICK VISUAL CHECKS

Examples of Desirable Conditions

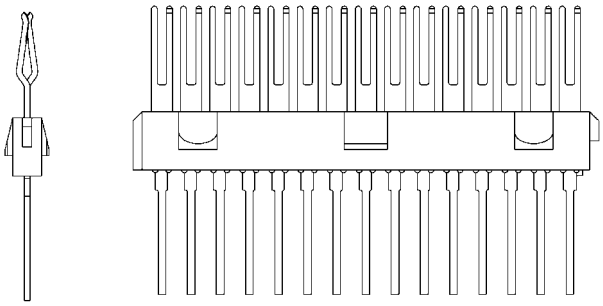

Refer to Sales Drawing# SDA-70985-100* For specific dimensions.

10.3 POSITION REQUIREMENTS (CONNECTOR CONTACTS)

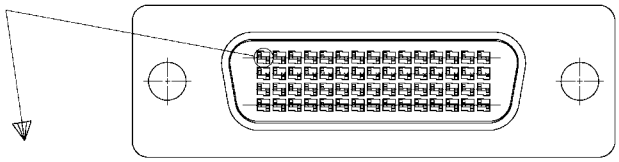

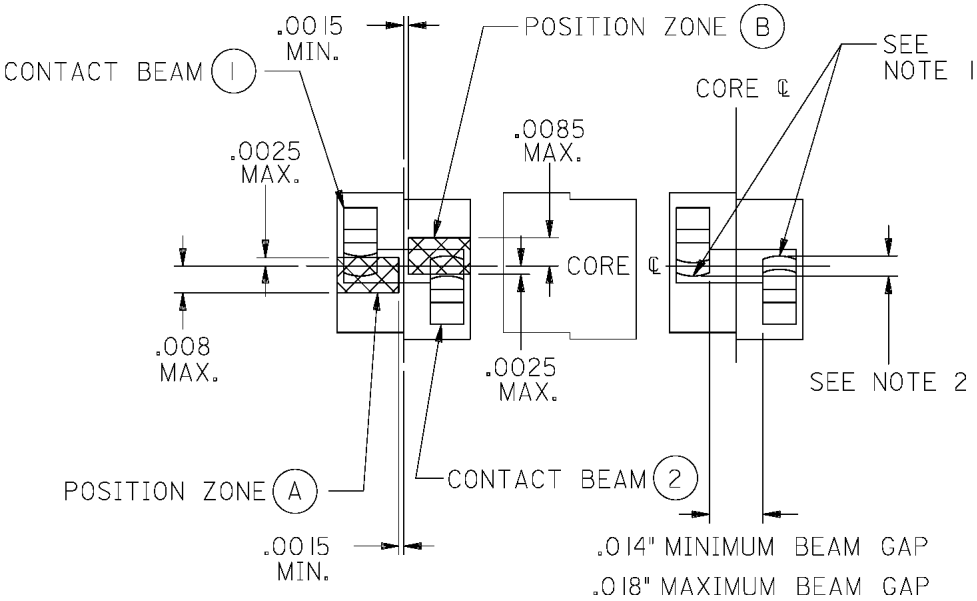

DETAIL "A" DETAIL "B"

NOTES:
1) CONTACT POINTS (MEASUREMENT POINTS)
2) .0095 MAXIMUM/ .0030 MINIMUM OVERLAP OF CONTACT BEAMS

10.0 INSPECTION: RECEPTACLE (CONT'D)

10.3 POSITION REQUIREMENTS (CONNECTOR CONTACTS) [CONT'D]

*CONTACT BEAM ① MAY BE LOCATED ANYWHERE WITHIN THE BOUNDARIES OF POSITION ZONE (A) PROVIDED THAT THE CONDITIONS OF DETAIL "B" ARE MET.

*CONTACT BEAM ② MAY BE LOCATED ANYWHERE WITHIN THE BOUNDARIES OF POSITION ZONE (B) PROVIDED THAT THE CONDITIONS OF DETAIL "B" ARE MET.

NOTE: ALL POSITION MEASUREMENTS TO BE TAKEN AT CONTACT POINTS, NOT AT CONTACT TIPS. ALL POSITION ZONES ARE TO BE DEFINED RELATIVE TO THE HOUSING CORE CENTERLINES.

10.4 LATCH REQUIREMENTS

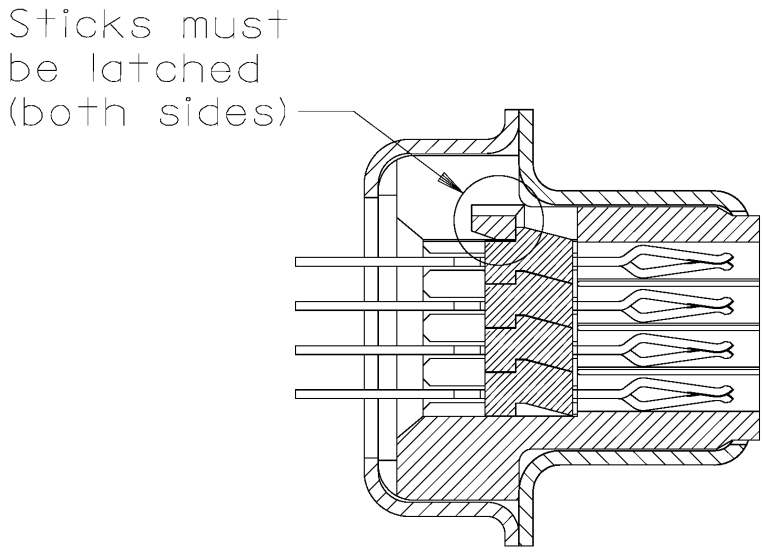

11.0 MATING

11.1 SECTIONAL VIEW OF MATED CONNECTORS IN FULLY SEATED CONDITION

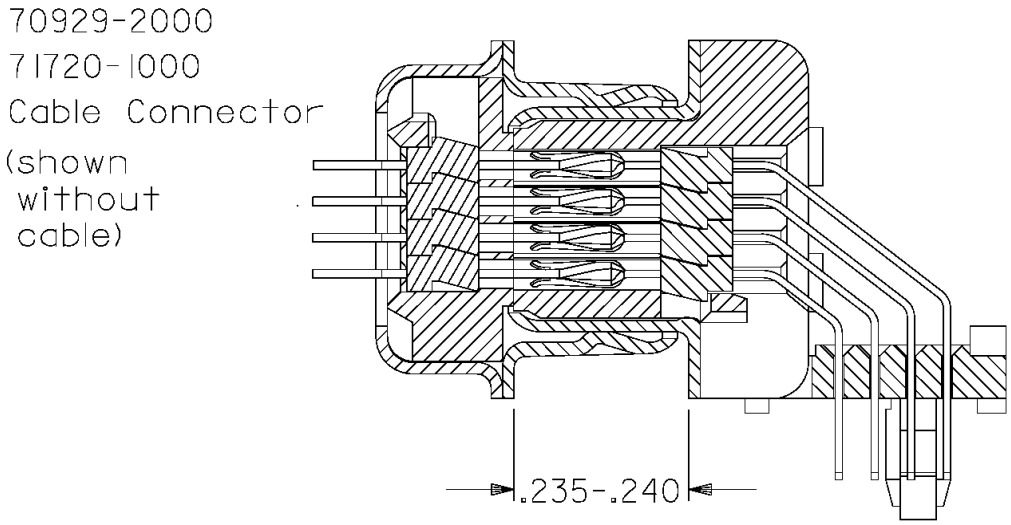

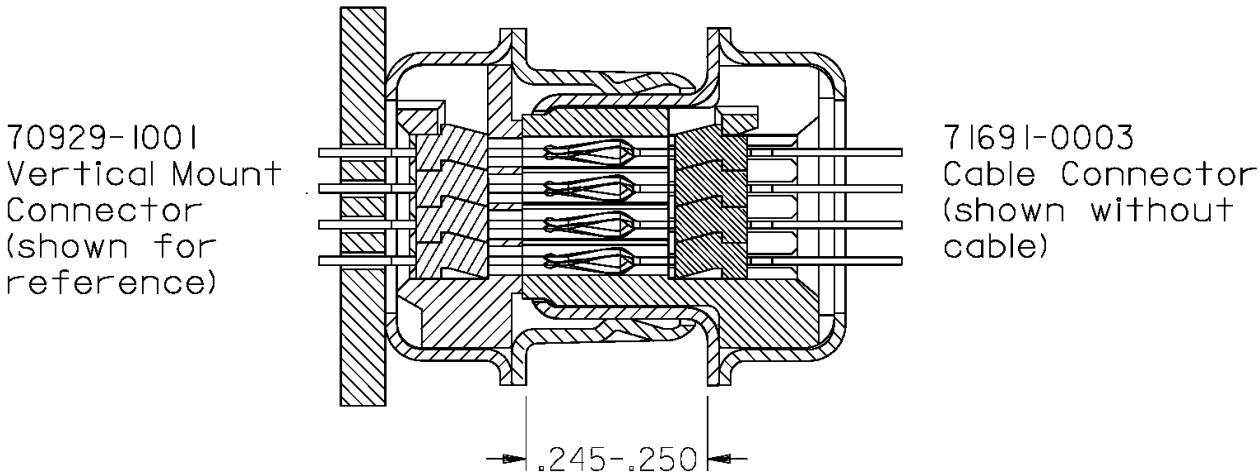

NOTE: Connectors should be fully seated before applying jackscrew.