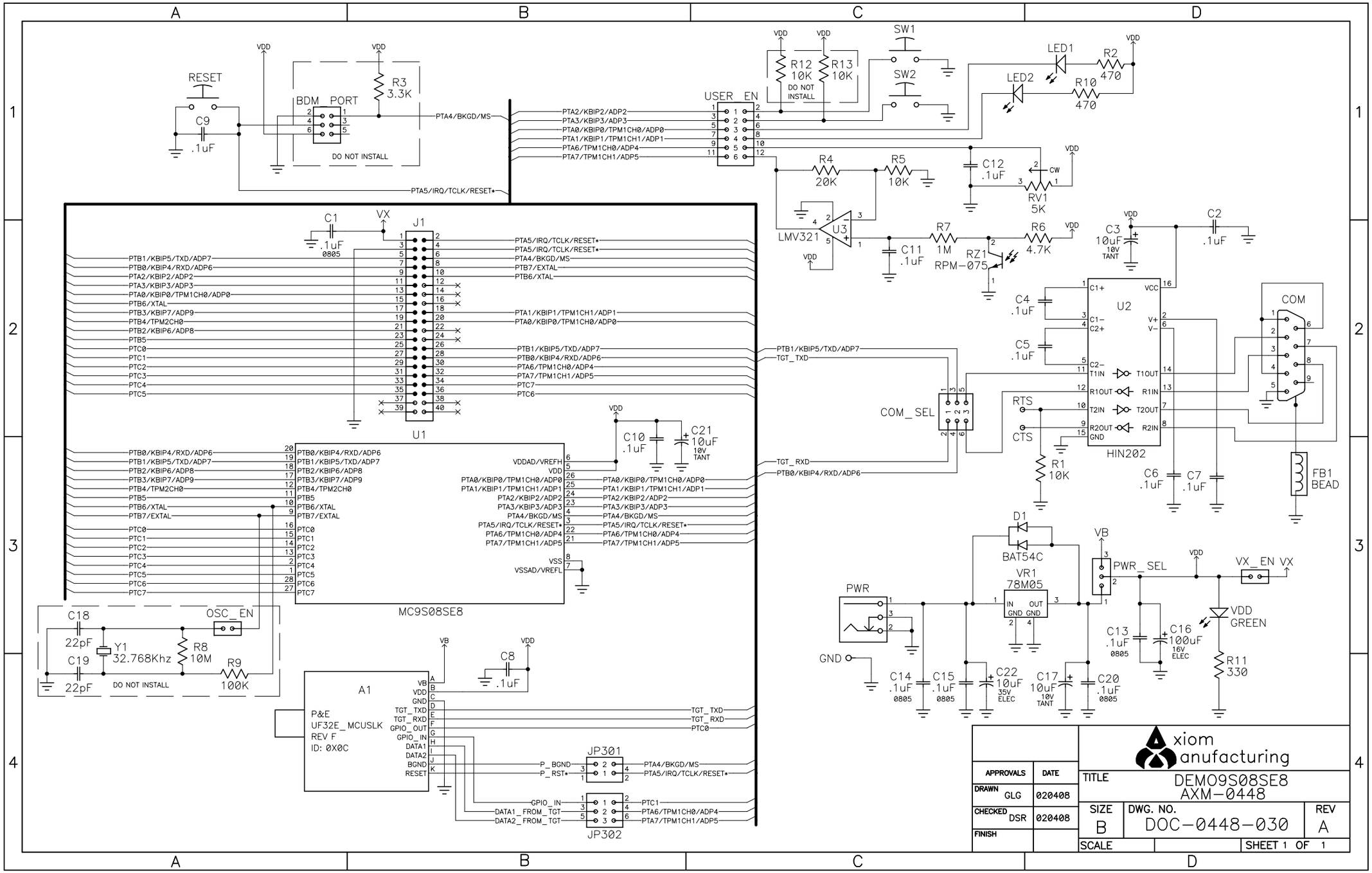
RESET
C9
.1uF
VDD
BDM PORT
R3
3.3K
DO NOT INSTALL
PTA4/BKGD/MS
PTA5/IRQ/TCLK/RESET*
USER_EN
PTA2/KBIP2/ADP2
PTA3/KBIP3/ADP3
PTA0/KBIP0/TPM1CH0/ADP0
PTA1/KBIP1/TPM1CH1/ADP1
PTA6/TPM1CH0/ADP4
PTA7/TPM1CH1/ADP5
R12
10K
R13
10K
DO NOT INSTALL
SW1
SW2
LED1
LED2
R2
470
R10
470
R4
20K
R5
10K
C12
.1uF
CW
RV1
5K
LMV321
U3
C11
.1uF
R7
1M
RZ1
RPM-075
R6
4.7K
C3
10uF
10V
TANT
C2
.1uF
C1
.1uF
0805
VX
J1
U1
PTB1/KBIP5/TXD/ADP7
PTB0/KBIP4/RXD/ADP6
PTA2/KBIP2/ADP2
PTA3/KBIP3/ADP3
PTA0/KBIP0/TPM1CH0/ADP0
PTB6/XTAL
PTB3/KBIP7/ADP9
PTB4/TPM2CH0
PTB2/KBIP6/ADP8
PTB5
PTC0
PTC1
PTC2
PTC3
PTC4
PTC5
PTA5/IRQ/TCLK/RESET*
PTA4/BKGD/MS
PTB7/EXTAL
PTB6/XTAL
PTA1/KBIP1/TPM1CH1/ADP1
PTC7
PTC6
TGT_TXD
TGT_RXD
COM_SEL
U2
HIN202
C4
.1uF
C5
.1uF
C6
.1uF
C7
.1uF
RTS
CTS
R1
10K
COM
FB1
BEAD
C10
.1uF
C21
10uF
10V
TANT
VDDAD/VREFH
VDD
VSS
VSSAD/VREFL
PTB7/EXTAL
PTC7
MC9S08SE8
C18
22pF
C19
22pF
Y1
32.768Khz
R8
10M
R9
100K
OSC_EN
DO NOT INSTALL
A1
P&E
UF32E_MCUSLK
REV F
ID: 0X0C
VB
C8
.1uF
GND
TGT_TXD
TGT_RXD
GPIO_OUT
GPIO_IN
DATA1
DATA2
BGND
RESET
PTC0
JP301
P_BGND
P_RST*
JP302
DATA1_FROM_TGT
DATA2_FROM_TGT
D1
BAT54C
VR1
78M05
IN
OUT
PWR
PWR_SEL
VX_EN
VDD
GREEN
R11
330
C13
.1uF
0805
C16
100uF
16V
ELEC
C14
.1uF
0805
C15
.1uF
0805
C22
10uF
35V
ELEC
C17
10uF
10V
TANT
C20
.1uF
0805
xiom
anufacturing
APPROVALS
DATE
DRAWN
GLG
020408
CHECKED
DSR
020408
FINISH
TITLE
DEMO9S08SE8
AXM-0448
SIZE
B
DWG. NO.
DOC-0448-030
REV
A
SCALE
SHEET 1 OF 1