NOTES:
1. MATERIALS AND FINISHES:
   BODY - BRASS, GOLD PLATING
   CONTACT - BRASS, GOLD PLATING
   INSULATOR - PEEK OR LCP
2. ELECTRICAL:
   A. IMPEDANCE: 50 OHM
   B. FREQUENCY RANGE: DC - 6 GHz
   C. VSWR(RETURN LOSS): 1.10 (26.4 dB), MAX. DC-2GHz
      1.22 (20 dB), MAX. 2-6GHz
   D. DIELECTRIC WITHSTANDING VOLTAGE: 500 VRMS, MIN.
3. PHYSICAL:
   A. DURABILTIY: 500 CYCLES MIN.
   B. ENGAGEMENT FORCE: 2 LB [9 N] MAX
   C. DISINGAGEMENT FORCE: .5 LB [2.2 N] MIN
   D. INNER CONTACT RETENTION FORCE: 1.5 LB [7 N] MIN
   E. TEMPERATURE RANGE: -65° C TO 165° C
4. PACKAGING:
   A. QUANTITY: SINGLE PACK
   B. MARKING:
      AMPHENOL
      SMP-MSCM-PCT-2
      DATE CODE
      QTY

THIRD ANGLE PROJ.

REVISIONS

REV	DESCRIPTION	DATE	ECO	APPR
A	RELEASE TO MFG	06-Dec-06	-----	Mark

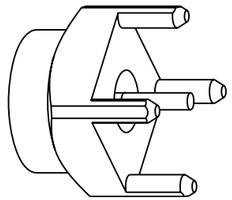

SCALE 4.000

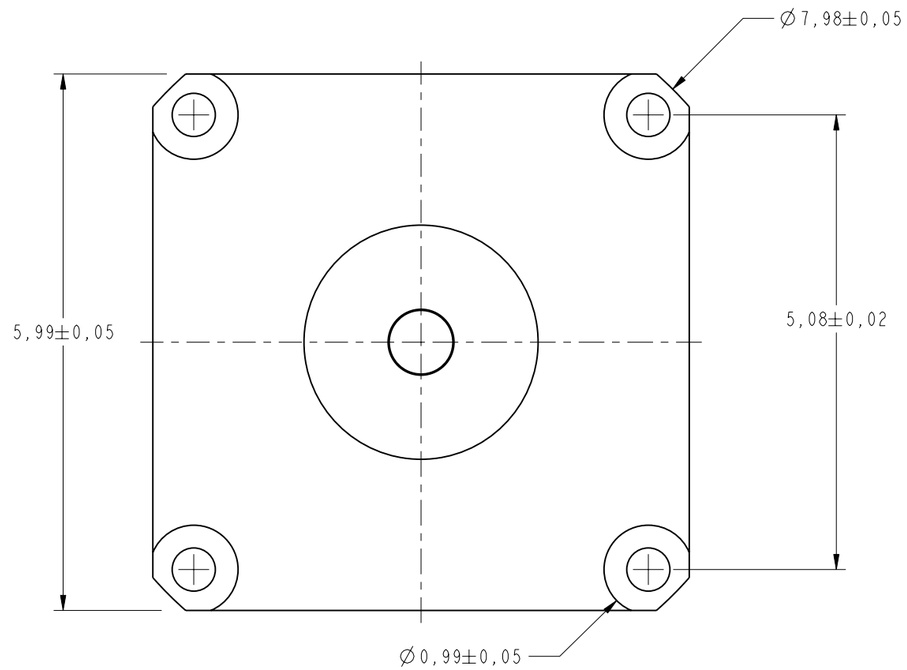

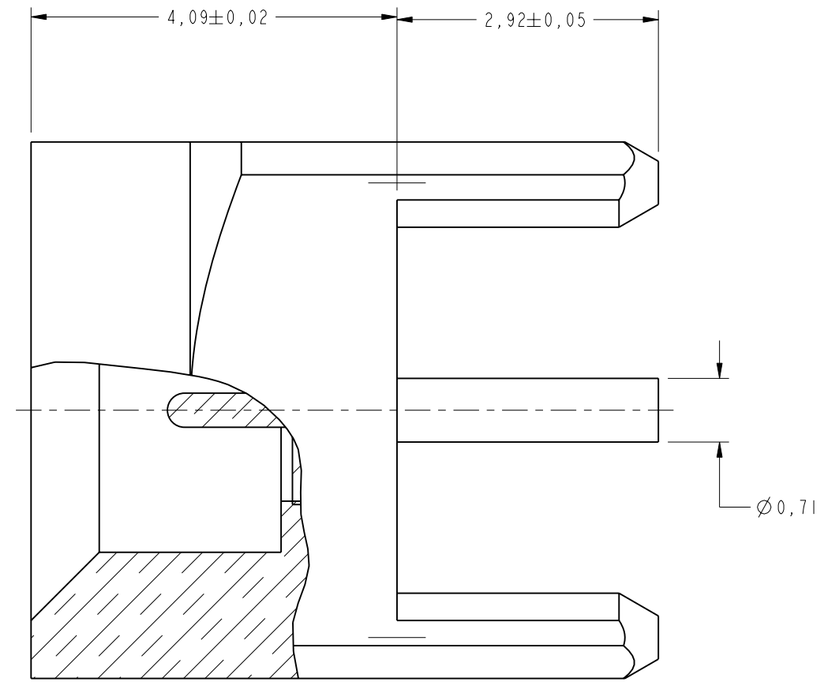

CUSTOMER OUTLINE DRAWING
ALL OTHER SHEETS ARE FOR INTERNAL USE ONLY

UNLESS OTHERWISE SPECIFIED, DIMENSIONS ARE IN METRIC AND TOLERANCES ARE:

0.5 - 6mm	6 - 30mm	30 - 120mm	ANGLES
±0.1mm	±0.2mm	± 0.3mm	±1°

NOTICE - These drawings, specifications, or other data (1) are, and remain the property of Amphenol corp. (2) must be returned upon requiest; and (3) arre confidential and not to be disclosed to any person other than those to whom they are given by Amphenol Corp. the funishing of these drawings, specifications, or other data by Amphenol Corp., or to any other person to anyone for any purpose is not to be regarded by implicatioin or otherwise in any manner licensing, granting rights to permitting such holder or any other sperson to manufacture, use or sell any product, process or design, patented or otherwsie, that may in any way be related to or disclosed by said drawings, specifications, or other data.

MATERIAL

REFERENCE AND CONFIGURATION LEVEL:

FINISH

DRAWN MARK	DATE 06-Dec-06	
ENGINEER GEFFERY	DATE 06-Dec-06	
APPROVED S.HSIEH	DATE 11-Dec-06	
CAD FILE I:\SMP\SMP-MSCM-PCT-2		

TITLE
ASSEMBLY
SMP,PLUG

SCALE: 15.0:1.0	SHEET 2 OF 2	
DWG SIZE B	CODE ID 74868	REV A

Amphenol RF
Danbury CT USA, Tainan, Taiwan, Shenzhen, China
www.amphenolrf.com

DRAWING NO. SMP-MSCM-PCT-2
ITEM NO. SMP-MSCM-PCT-2
PART NO. SMP-MSCM-PCT-2