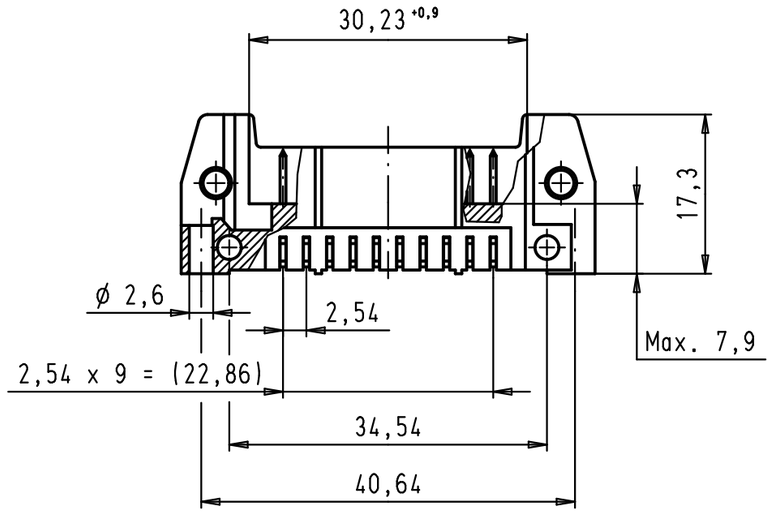

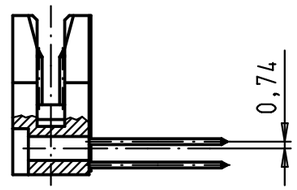

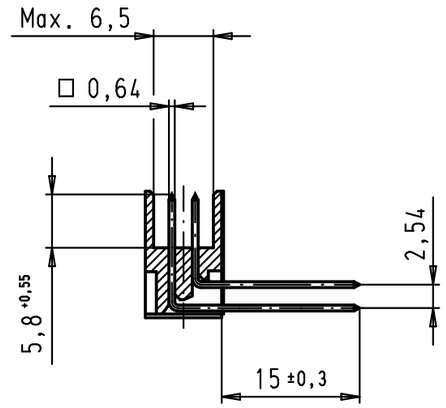

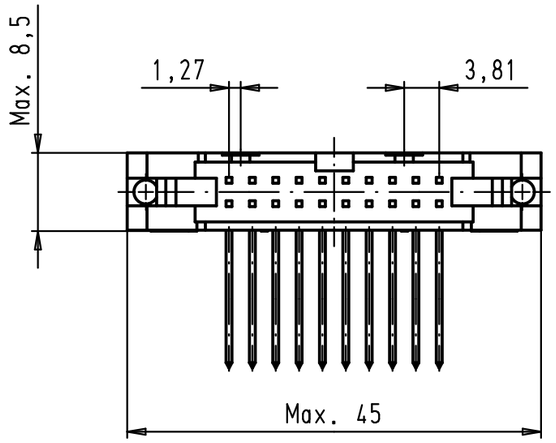

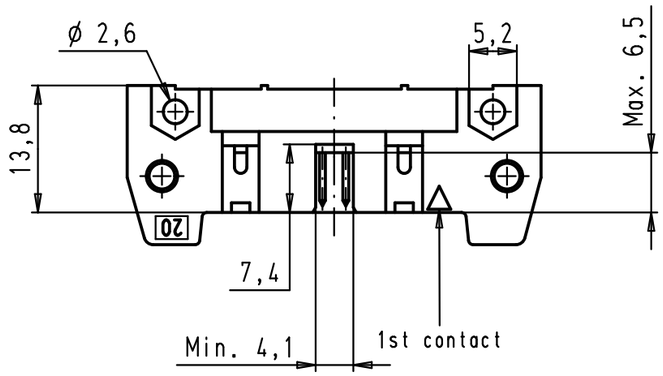

09 18 520 7926	3
09 18 520 6926	2
09 18 520 5926	0,76 µm Au
Part number	Performance level

				Dat.	Name
			Detail.	19/09/02	CV
			Insp.		
			Stand.		
34890	13/06/08	PK			
31092	19/09/02	CV			
Mod.	Dat.	Name			

All Dim. in mm
Orig. Size DIN A 3

HARTING EURL
F-95972 Paris

SEK 18 Male Connector Standard
20 poles
Angled wrap posts
Without locking levers

Maßstab/ Scale: 1,5:1

TB 09 18 520 X926

Sub.

Blatt/ Page 1/1

Alle Rechte vorbehalten/ All rights reserved