Copyright FCI.

FCIconnect.com

PRODUCT NUMBER	PITCH
YGxx01x100J0G	5.00mm

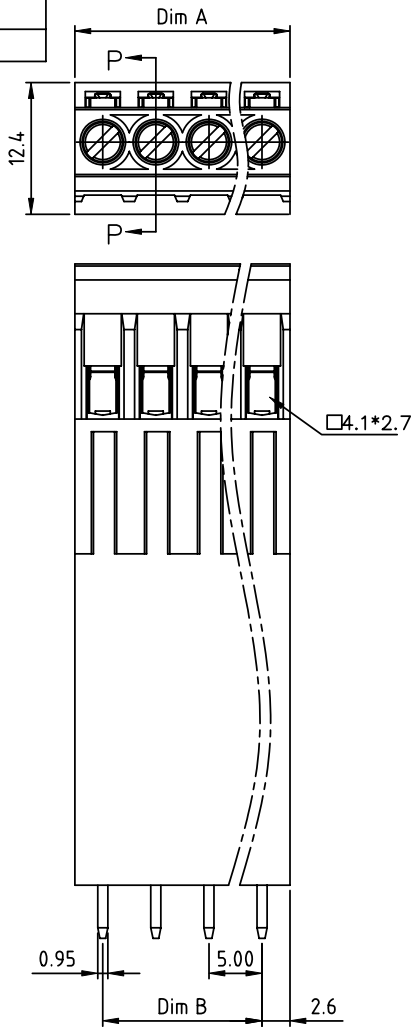

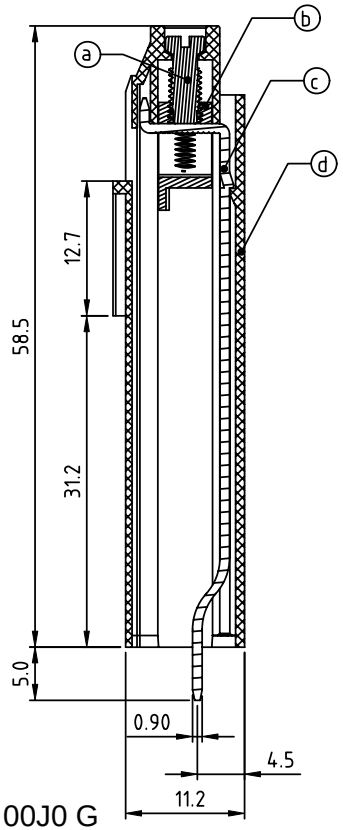

SECTION P-P

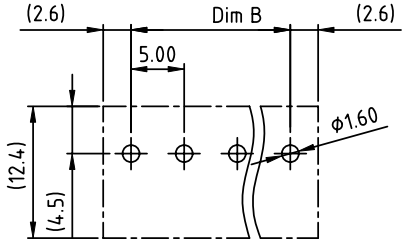

RECOMMENTED P.C.B LAYOUT
TOP VIEW

Material

- Item ⓐTerminal screw: Steel Zinc plating "-" slot type
- Item ⓑClamp : Brass , Ni plating
- Item ⓒSolder pin : Brass,Tin plated
- Item ⓓTerminal housing : Thermoplastic (UL94V-0)

Electrical

- Voltage rating: 300VAC
- Current rating: 15A
- Wire range:
- Solid wire(AWG): 12-28
- Stranded wire(AWG): 12-28
- Torque(Lb-In): 4.3
- Screw: M3
- Wire strip length: 7-8mm
- Withstanding Voltage: 1.6KV
- Operating temperature: -40°C to +115°C
- Soldering temperature: 260°C±5°C/5 Sec

PART NO.: YG xx 0 1 x 1 00J0 G

N = Number of poles
Dim A=Nx5.0+0.25
Dim B=(N-1)x5.0

Poles	DimA&B Tolerance
2p-6p	±0.20
7p-12p	±0.30
13p-18p	±0.40
19p-24p	±0.50

Solid block
No. of poles
02 2 poles
03 3 poles
... ...
24 24 poles

Color
0 Black (RAL9005)
2 Red (RAL3001/D)
3 Orange(RAL2011/P)
4 Yellow(RAL1018/A)
5 Green(RAL6018/T)
6 Blue (RAL5015/A)
8 Grey(RAL7035/D)
9 White(RAL1102)
C Green(RAL6018/U)

RoHS compliant
(lead<4%)
In copper Alloy

mat'l. code				surface ASME Y14.5	tolerance ASME Y14.5	projection
ltr	ecn no	dr	date	tolerances unless otherwise specified		
				angles	linear X.±0.5	MM
				X°±1°	X.X±0.3	
					X.XX±0.1	scale
				dr	EVIN ZHONG	041014
				engr	EVIN ZHONG	041014
				chr	HANKE FENG	041014
				appd	SHI JUN	041014
sheet index	revision	A				
	sheet	1				

product family: TERMINAL BLOCK
title: TERMINAL BLOCK
RISING CLAMP,180D WIRE INLET,SOLID BLOCK
dwg no: YGxx01x100J0G
sheet 1 of 1
size: A4
type: CUSTOMER Drawing