THIS DRAWING IS UNPUBLISHED. RELEASED FOR PUBLICATION – ;– .
© COPYRIGHT – BY TYCO ELECTRONICS CORPORATION. ALL INTERNATIONAL RIGHTS RESERVED.

PART NUMBER	REV	FIRST USED
1852196–1	B	122500–1
1852196–2	B	565435–5
1852196–3	B	354500–1

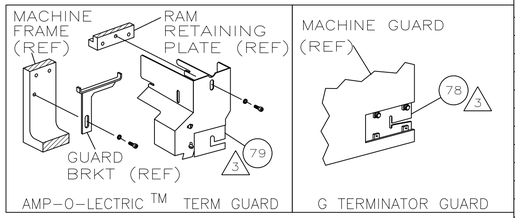

TERMINAL NAME: FEMALE 6

AMP TERM PN	MFR TERM PN
1572942	7116–4143–02

AMP SEAL PN	MFR SEAL PN
1572943.	7158–3084–40

YAZAKI TERMINAL AMP CRIMP SPECS

PAD LTR	CRIMP HEIGHT	WIRE SIZE
A	2.25 ±0.05 [.089 ±.002]	10 AWG
B	NOT	USED
C	NOT	USED
D	NOT	USED

CRIMP	SIZE	TYPE	RANGE
WIRE	.157 [3.99mm]	F	10 AWG
INSUL	.240 [6.09mm]	0	3.80–4.05mm

WIRE STRIP LENGTH	TERM APPL SPEC	FEED	APPL INSTRUCTION	SET UP GAGE	LAYOUT
–	NONE	.870	408–8040	458637–1	L1852196

LOC	DIST
A	66

REVISIONS

P	LTR	DESCRIPTION	DATE	DWN	APVD
	B	ECR–09–009983	5–2009	MY	TE

–1	LEADMAKER	AIRFEED
–2	BENCH MODEL K	AIRFEED
–3	BENCH MODEL G	AIRFEED

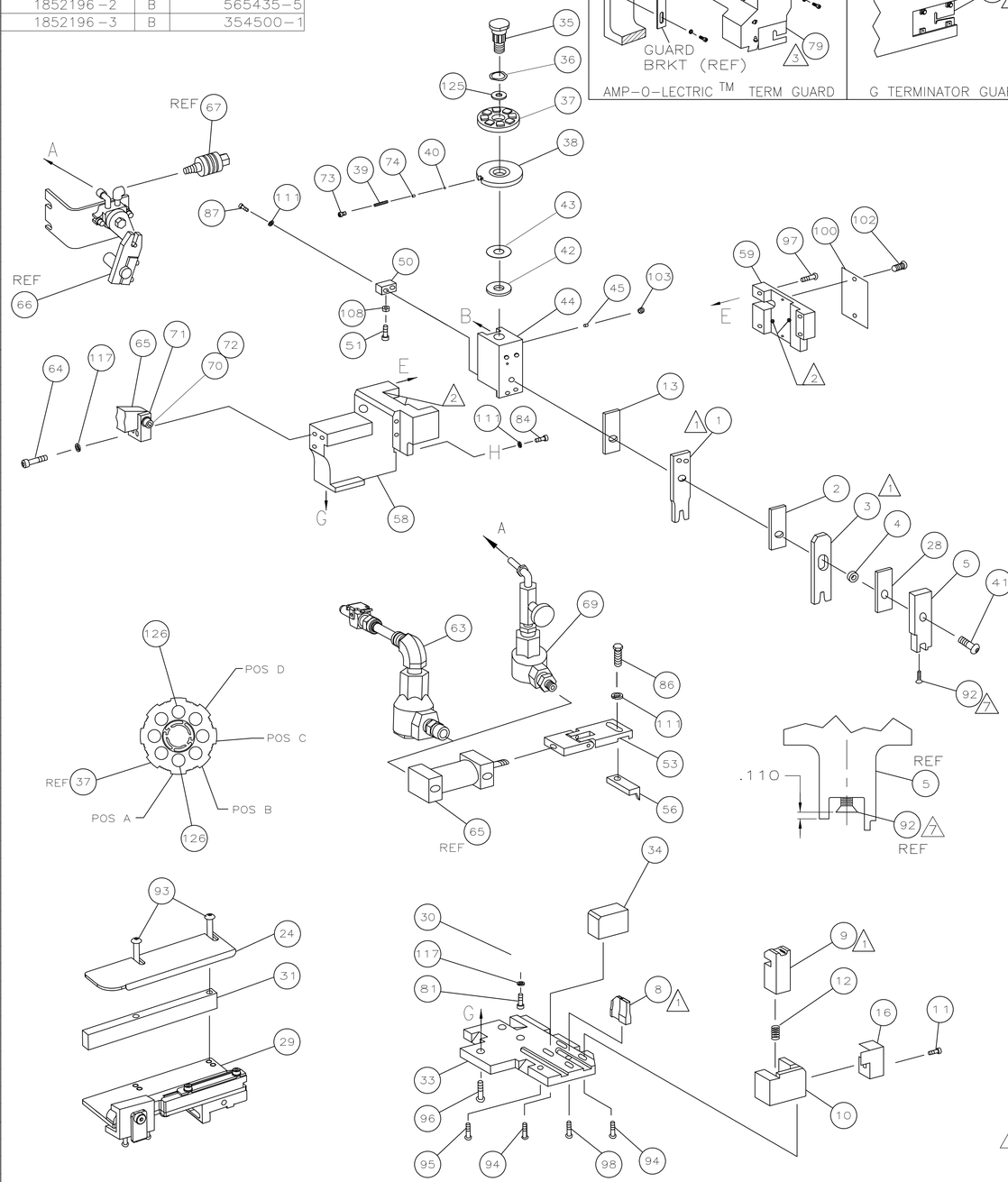

–3	–2	–1	U/M	PART NO	DESCRIPTION	ITEM NO
						129
						128
						127
2	2	2	–	7–354778–7	PIN, WIRE DISC (.2880)A	126
1	1	1	–	986950–1	WASHER, FLAT PRECISION	125
1	1	1	–	217238–1	GENERAL INSTRUCTION PACKAGE	124
1	1	1	–	4088040	SF APPL INST 408–8040	123
						122
						121
						120
						119
						118
3	3	3	–	21024–5	WASHER, LOCK(#10)ADJ BLOCK	117
						116
						115
						114
						113
						112
4	4	4	–	21024–4	WASHER,LOCK(#8)STRIPPER	111
						110
						109
1	1	1	–	21018–5	NUT,HEX(NO.6)HOLDDOWN	108
						107
						106
						105
						104
1	1	1	–	21009–2	SCR,SKT SET(1/4–20x.25 LW)RAM	103
2	2	2	–	21017–2	SCR,DRIVE(#2x.19)ID PLATE	102
						101
1	1	1	–	461264–1	PLATE, IDENTIFICATION	100
						99
1	1	1	–	22733–8	SCR,BHC(8–32x.38 LW)ANVIL	98
4	4	4	–	2–21002–9	SCR,BHC(10–32x.75)CAP	97
3	3	3	–	2–22733–8	SCR,BHC(1/4–20x.62)HSG	96
1	1	1	–	2–21002–7	SCR,BHC(10–32x.50)SG ADJ BLK	95
4	4	4	–	2–21002–2	SCR,BHC(8–32x.50)TERM H DWN	94
2	2	2	–	2–21002–4	SCR,BHC(8–32x.75)CAP	93
1	1	1	–	1–21003–9	SCR,FHC(6–32x.38)DEP	92
						91
						90
						89
						88
2	2	2	–	2–21000–7	SCR,SHC(8–32x.44)DEP–HOLD	87
1	1	1	–	2–22603–0	SCR,HEX HD(8–32x.38)FEED FINGER	86
						85
1	1	1	–	2–21000–7	SCR,SHC(8–32x.50)STRIPPER	84
						83
						82
1	1	1	–	3–21000–4	SCR,SHC(10–32x.38)SG ADJ BL	81
						80
–	1	–	–	462992–7	GUARD ASSY	79
REF	–	–	–	354529–1	INSERT, GUARD	78
						77
						76
						75
1	1	1	–	690603–1	SPRING, ASSIST	74
1	1	1	–	23030–1	SCR,SHC(6–32x.25 SL)INS DISC	73
1	1	1	–	3–21001–5	SCR,SHC(3/8–16X1.00)AIR FEED	72
1	1	1	–	459610–1	MOUNT, FEED BRACKET	71

QTY REQD PER ASSY — PARTS LIST

–3	–2	–1	U/M	PART NO	DESCRIPTION	ITEM NO
1	1	1	–	21024–8	WASHER, LOCK 3/8	70
–	1	–	–	692655–5	AIR FEED VALVE ASSY	69
						68
–	REF	–	–	24042–2	VALVE, SHUT OFF	67
–	REF	–	–	692655–6	AIR FEED VALVE ASSY	66
1	1	1	–	461065–1	AIR FEED ASSY (1 INCH)	65
2	2	2	–	3–21000–9	SCR,SHC(10–32x1.00)AIR ASSY	64
1	–	1	–	692655–7	AIR FEED VALVE	63
						62
						61
						60
1	1	1	–	454220–1	CAP, RAM	59
1	1	1	–	454485–1	HOUSING	58
						57
1	1	1	–	458537–2	PAWL, FEED	56
						55
						54
1	1	1	–	461062–1	FEED FINGER ASSY	53
						52
1	1	1	–	811242–2	BUMPER, HOLDDOWN	51
1	1	1	–	690753–1	SPACER, TONKER	50
						49
						48
						47
						46
1	1	1	–	690191–1	PLUG, NYLON	45
1	1	1	–	819307–4	RAM	44
1	1	1	–	690125–1	WASHER, LAMINATED	43
1	1	1	–	690124–1	WASHER, RAM	42
1	1	1	–	7–21002–9	BOLT, CRIMPER(5/16x1.00)	41
1	1	1	–	23241–6	BALL, STEEL	40
1	1	1	–	690170–1	SPRING, COMPRESSION	39
1	1	1	–	1–690142–3	DISC, INSULATION	38
1	1	1	–	354777–1	DISC, WIRE	37
1	1	1	–	22480–5	WASHER, SPRING	36
1	1	1	–	690212–1	POST, RAM	35
1	1	1	–	690786–3	SUPPORT, TERMINAL	34
1	1	1	–	318055–4	PLATE, BASE	33
						32
1	1	1	–	1–1320908–2	SPACER, STRIP GUIDE	31
1	1	1	–	455689–1	BLOCK, STRIP GUIDE ADJ	30
1	1	1	–	1633091–7	STRIP GUIDE ASSEMBLY	29
1	1	1	–	455888–8	SPACER, FRONT SHEAR DEP	28
						27
						26
						25
1	1	1	–	1320928–1	GUIDE, STRIP (REAR)	24
						23
–	–	1	–	690472–2	STRIPPER	22
						21
						20
1	1	–	–	619353–1	STRIPPER	19
						18
						17
1	1	1	–	318563–1	GUARD, CHIP, FRONT	16
						15
						14
1	1	1	–	455888–5	SPACER, CRIMPER	13
1	1	1	–	3–22280–3	SPRING, SHEAR	12
1	1	1	–	1–21000–9	STOP, SHEAR	11
1	1	1	–	2–690459–2	HOLDER, SHEAR (FRONT)	10
1	1	1	–	318059–4	SHEAR, FLOAT (FRONT)	9
1	1	1	–	1633332–2	ANVIL	8
						7
						6
1	1	1	–	122399–4	DEPRESSOR, SHEAR (FRONT)	5
1	1	1	–	238011–2	SPACER, BLOCK CRIMPER	4
1	1	1	–	6–1583690–3	CRIMPER, INSULATION	3
1	1	1	–	2–455888–1	SPACER, CRIMPER	2
1	1	1	–	4–1633305–7	CRIMPER, WIRE	1

QTY REQD PER ASSY — PARTS LIST

1. RECOMMENDED SPARE PARTS.
2. GREASE LIGHTLY.
3. GUARD MUST BE IN PLACE WHEN OPERATING APPLICATOR IN A BENCH MACHINE.
4. SEE DRAWING FOR COMPONENTS
5. CUT TO LENGTH AT ASSY
6. THIS APPLICATOR APPLIES TERMINAL WITH A SEAL.
7. APPLY TORQ–SEAL IN ALLEN SOCKET TO FILL HOLE AFTER FLAT HD HAS BEEN ADJUSTED TO CORRECT HEIGHT AT QUALIFICATION. APPLY PN 1–23419–5 LOC–TITE TO THREADS.

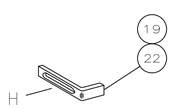

BENCH MACHINE & LEADMAKER

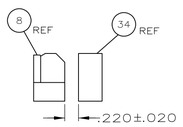

ITEM 34 LOCATION

THIS DRAWING IS A CONTROLLED DOCUMENT.

DIMENSIONS: INCHES

TOLERANCES UNLESS OTHERWISE SPECIFIED:
0 PLC ± –
1 PLC ± –
2 PLC ± .02
3 PLC ± –
4 PLC ± –
ANGLES ± –

MATERIAL –
FINISH –

DWN 22FEB06 C.REICHELDERFER
CHK –
APVD 22FEB06 T.FLRIN
PRODUCT SPEC –
APPLICATION SPEC –
WEIGHT F

Tyco Electronics
Tyco Electronics Corporation
Harrisburg, PA 17105–3608

NAME SIDE FEED HDM APPLICATOR – –

SIZE A1 | CAGE CODE 00779 | DRAWING NO C–1852196 | RESTRICTED TO –

CUSTOMER DRAWING | SCALE – | SHEET 1 OF 1 | REV B

4805 (1/08)

04MAY2009 7:14am