Apr.1.2017 Copyright 2017 HIROSE ELECTRIC CO., LTD. All Rights Reserved.

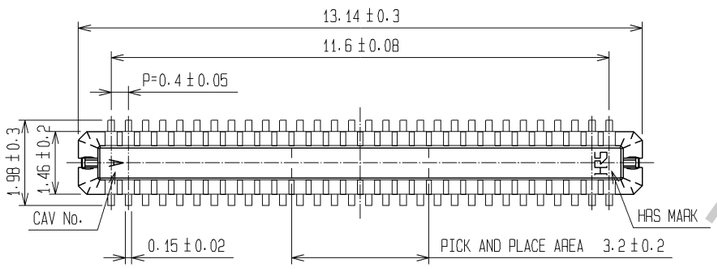

RECOMMENDED METAL MASK OPENING PATTERN

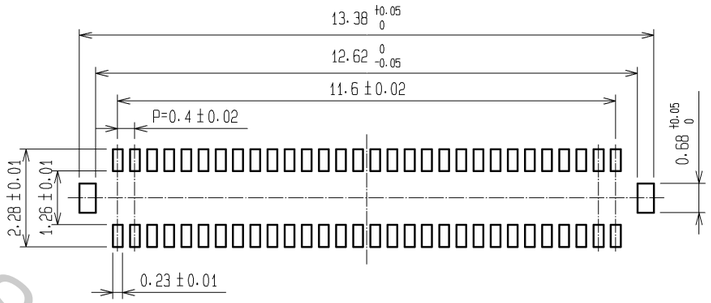

RECOMMENDED SOLDER PASTE THICKNESS: 120μm

RECOMMENDED PATTERN

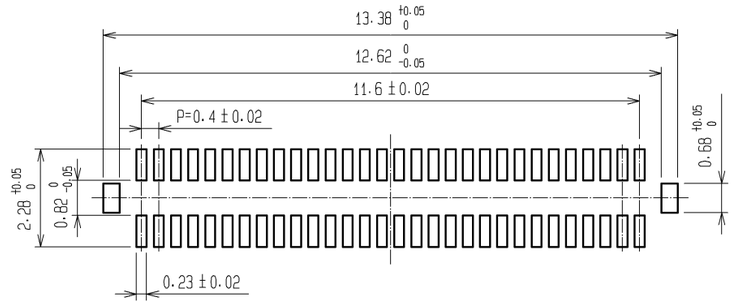

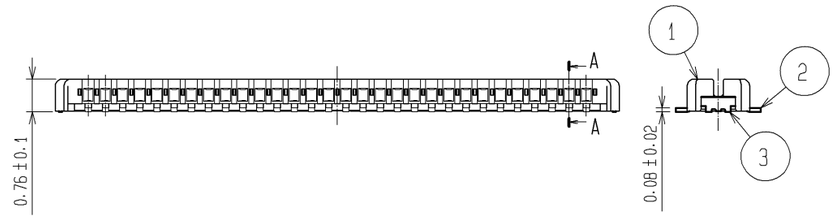

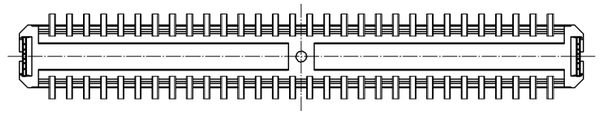

A-A

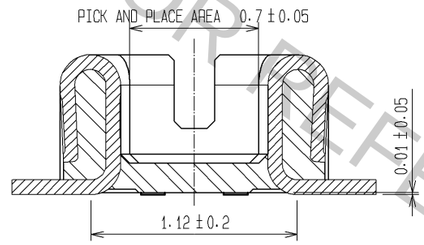

ENGAGEMENT FIGURE

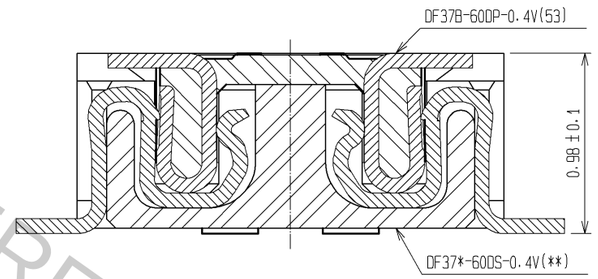

NOTE 1. ALL LEADS CO-PLANARITY SHALL BE 0.1 MAX.
2. PER REEL : 1000 CONNECTORS.
3. AT THE BEGINNING OF THE REEL, 100 mm AT MIN SHALL BE EMPTY POCKETS.
AT THE END OF THE REEL, 160 mm AT MIN SHALL BE EMPTY.
4. CONTACT PLATING SPECIFICATIONS.
CONTACT AREA : GOLD 0.05μm MIN.
SMT LEAD : GOLD 0.05μm MIN.
UNDERPLATING : NICKEL 1μm MIN.
(SURFACE : SEALING)
5. METAL HOLD DOWN PLATING SPECIFICATIONS.
MOUNTING AREA: GOLD 0.05μm MIN.
UNDERPLATING : NICKEL 1μm MIN.
6. PEEL FORCE OF COVER TAPE REFERS TO JIS C 0806.

NO.	MATERIAL	FINISH , REMARKS	NO.	MATERIAL	FINISH , REMARKS
3	PHOSPHOR BRONZE	5	6	PS	PLASTIC REEL(BLACK)
2	PHOSPHOR BRONZE	4	5	POLYESTER	CLEAR(COVER TAPE)
1	LCP	UL94V-0, BLACK	4	PS	CLEAR(EMBOSSED CARRIER TAPE)

UNITS	SCALE	COUNT	DESCRIPTION OF REVISIONS	DESIGNED	CHECKED	DATE
mm	FREE					

HRS HIROSE ELECTRIC CO., LTD.

APPROVED	: KH. IKEDA	09.01.19	DRAWING NO.	EDC3-308588-03
CHECED	: TS. MIYAZAKI	09.01.19	PART NO.	DF37B-60DP-0.4V(53)
DESIGNED	: RT. SHIMIZU	09.01.17	CODE NO.	CL684-3013-1-53
DRAWN	: AK. AOYAGI	09.01.16		

1/2

HRS DRAWING FOR REFERENCE

Apr.1.2017 Copyright 2017 HIROSE ELECTRIC CO., LTD. All Rights Reserved.

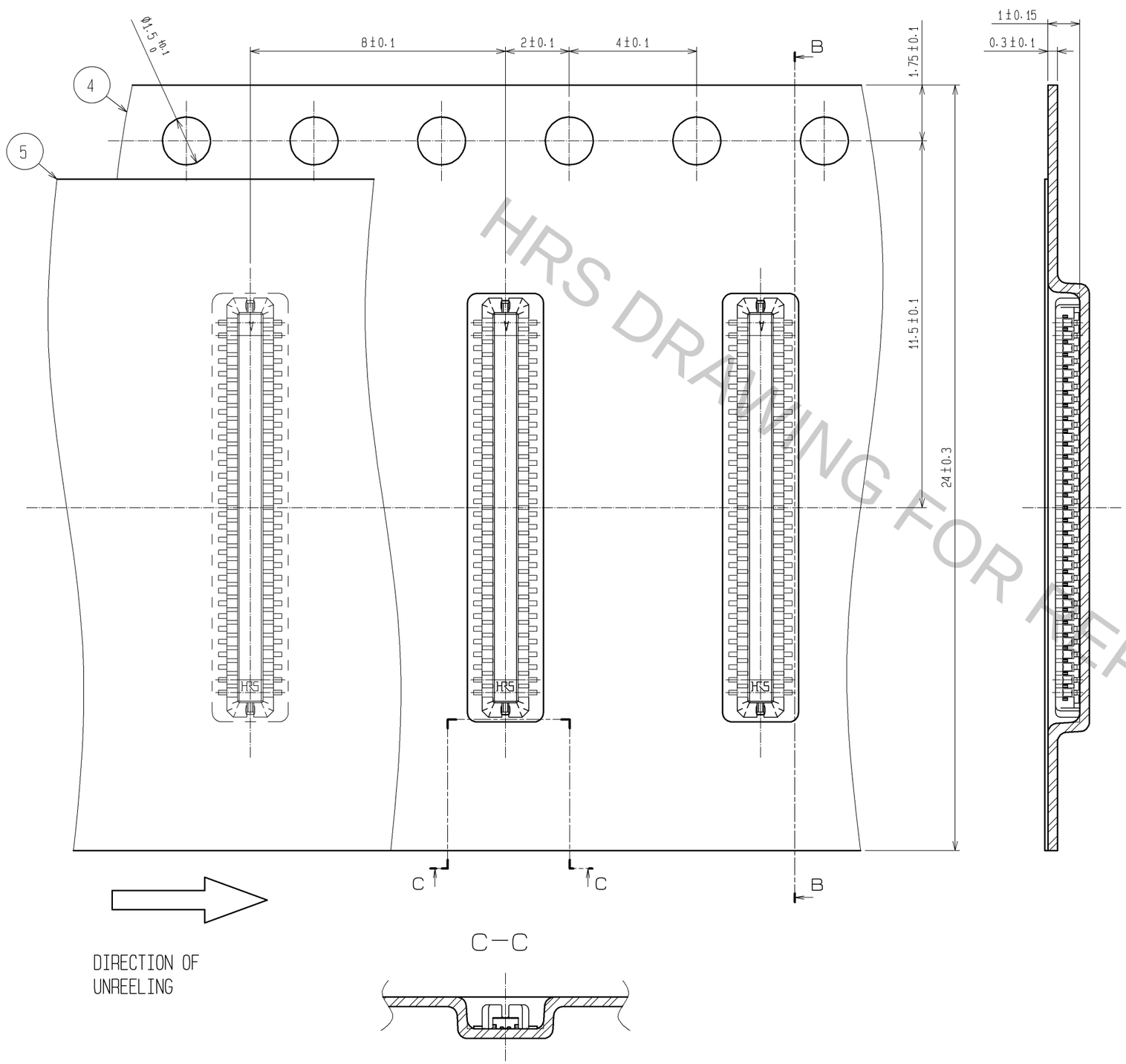

STYLE AND DIMENSION OF REEL (FREE SIZE)

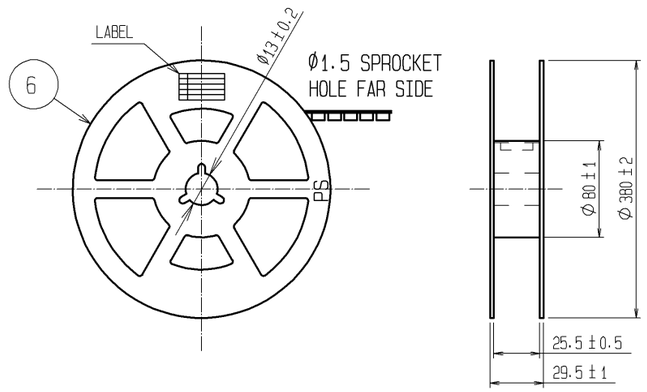

DETAIL OF PART NO. LABEL

SUPPLIER
QUANTITY
PART NO.
CODE NO.
DATE OF MANUFACTURED

生産月日	年　月　日
図番	CL684-3013-1-53
品名	DF37B-60DP-0.4V(53)
納入数量	1000個
納入者	ヒロセ電機(株)

HRS DRAWING FOR REFERENCE

HRS	DRAWING NO.	EDC3-308588-03
	PART NO.	DF37B-60DP-0.4V(53)
	CODE NO.	CL684-3013-1-53 △ 2/2