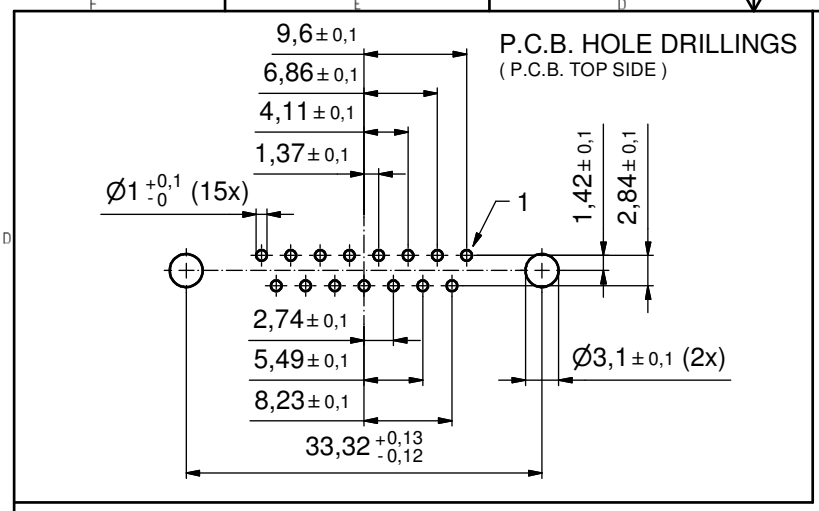

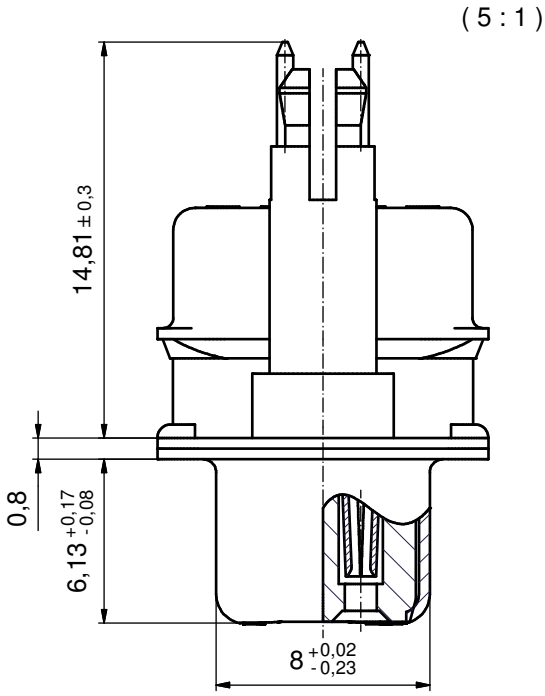

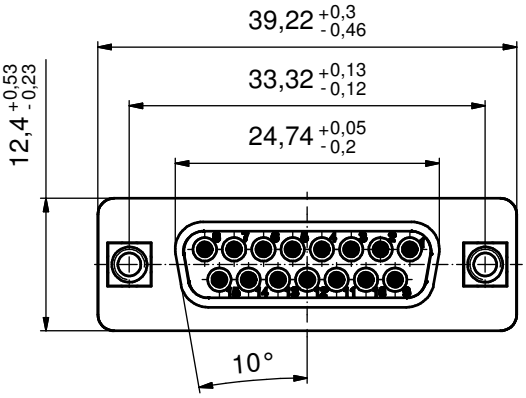

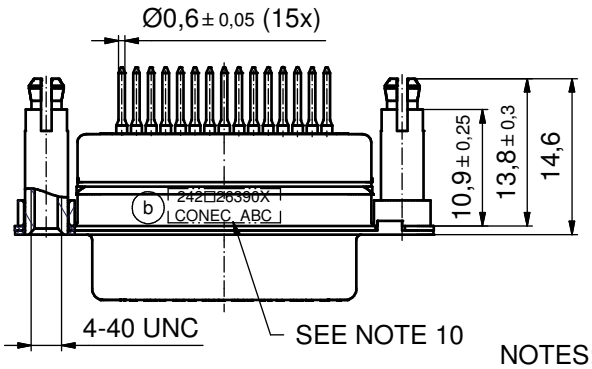

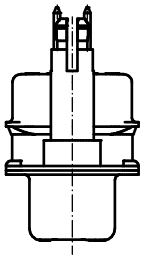

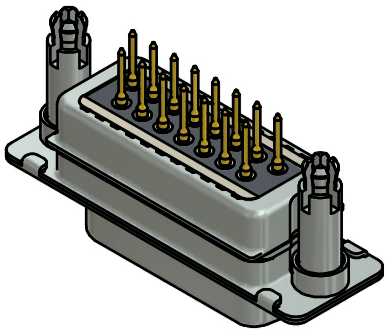

NOTES:

1. FOR WAVESOLDERING (SOLDER BATH TEMPERATURE 260°C FOR 5 SEC. AND SOLDER PREHEAT 100°C FOR 30 SEC.)
2. METALSHELLS: STEEL; min. 315µin TIN over 40-80µin NICKEL
3. INSULATOR: HIGH TEMPERATURE PLASTIC UL 94 V-0; BLACK
4. CONTACTS: COPPER ALLOY; PLATING (SEE PART NO.):
   (b) □ PLEASE ADD A for GOLD FLASH over NICKEL (PREFERRED TYPE)
   □ PLEASE ADD B for 20µin HARD GOLD over min. 50µin NICKEL
   □ PLEASE ADD C for 30µin HARD GOLD over min. 50µin NICKEL
   CONTACT TAILS PRETINNED
5. THREADED SPACER CLIPS: COPPER ALLOY; min. 200µin TIN over 80µin NICKEL
   PCB-HOLE: ⌀3,1 ± 0,1; PCB THICKNESS 1,6mm
6. COLLARS: COPPER ALLOY; min. 200µin TIN over 80µin NICKEL
7. CAPACITANCE: 2 x 1300pF ± 20%
8. DIELECTRIC WITHSTANDING VOLTAGE: 300 VDC
9. MAXIMUM TORQUE VALUE FOR THREAD: 6 in.LB
10. CONNECTOR IS PART MARKED: 242□26390X CONEC ABC (see note 4)

Directive 2002/95/EC RoHS compliant

THIS DRAWING MAY NOT BE COPIED OR REPRODUCED IN ANY WAY, AND MAY NOT BE PASSED ON TO A THIRD PARTY WITHOUT WRITTEN PERMISSION. OWNERSHIP AND COPYRIGHT OF CONEC GmbH

DO NOT ALTER CAD DRAWING BY HAND

rev.	description	date	name
4 x b	Ä5135	18.03.2014	K.H.
a	Original		

tolerance: dim. in mm

	date	name
drawn	18.03.14	Henneboel
appd.	06.05.14	Schmidt
norm		
d-old	24K1A984	

CONEC®

scale: 2:1 (5:1)
material: SEE NOTES

title:
D-SUB PI FILTER FEMALE
15pos. SOLDER PIN STRAIGHT
with threaded spacer clip

dwg no: 24K1A1506 (b)
DIN-A3
sh: 1

part no: (b) 242□26390X (see note 4)