HH—3635

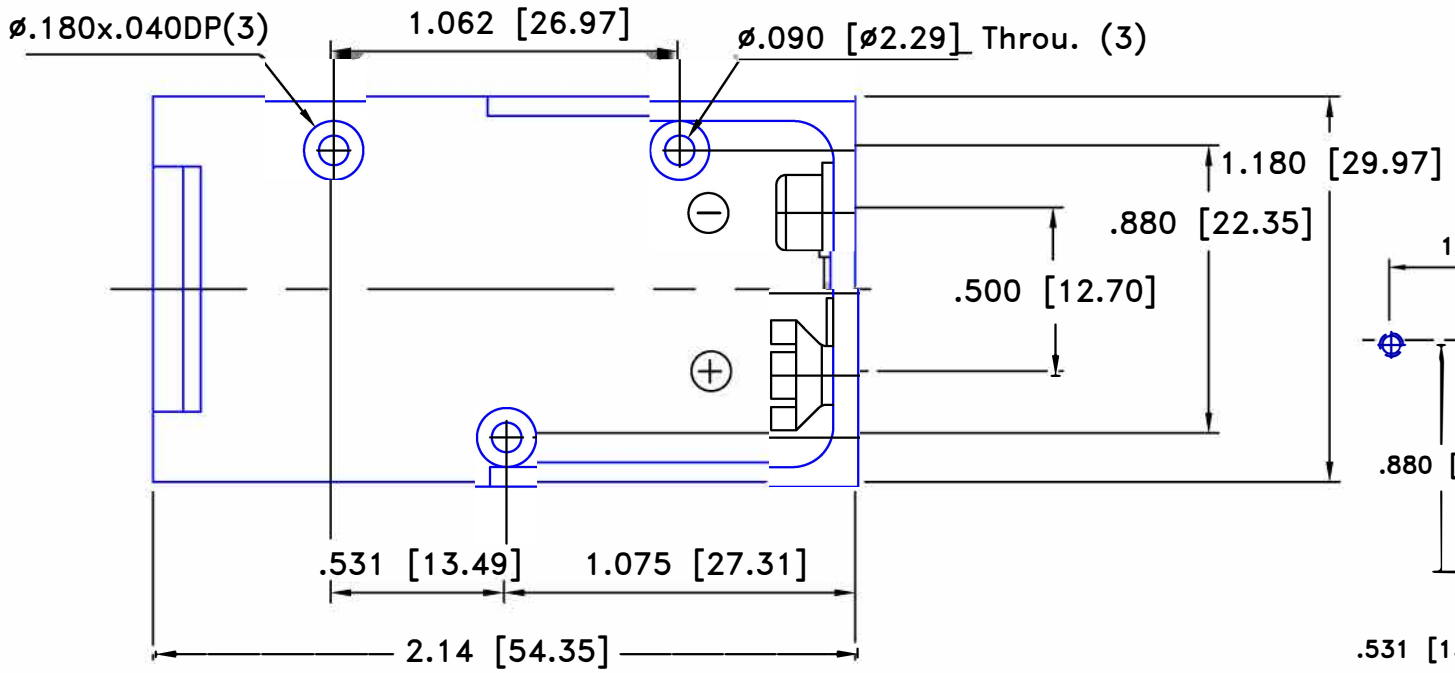

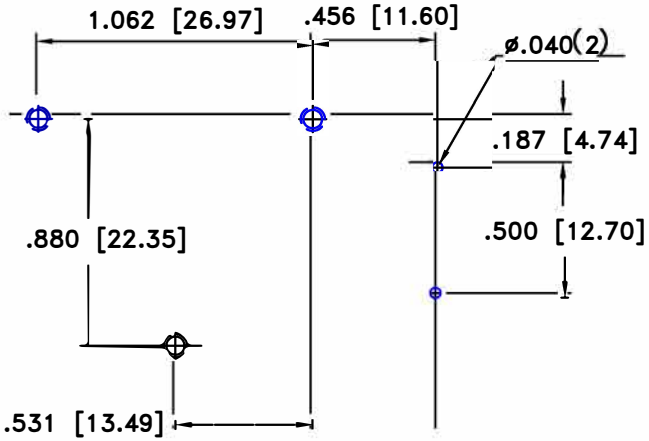

PCB LAYOUT

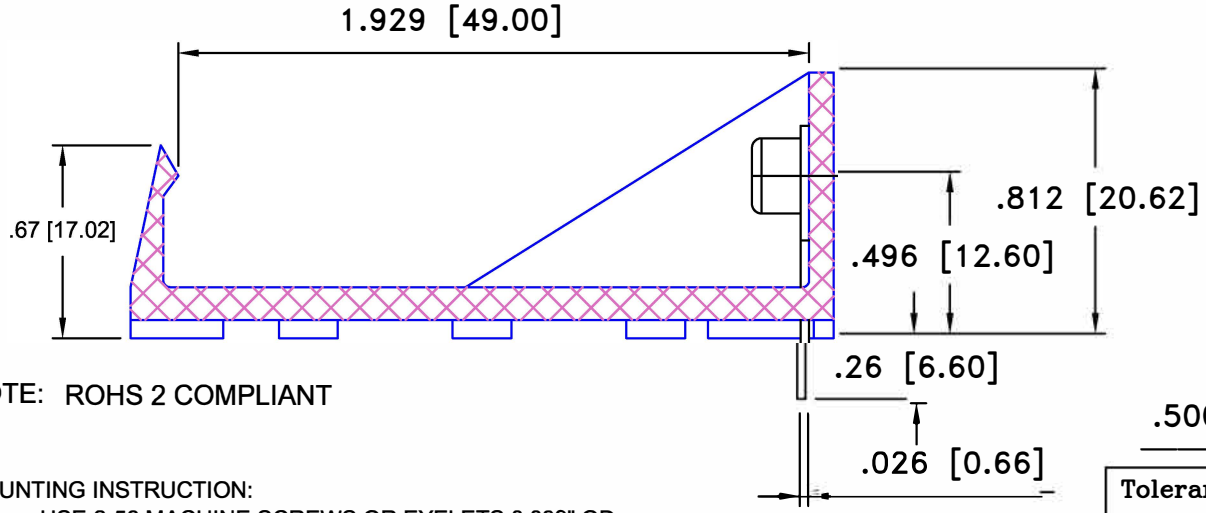

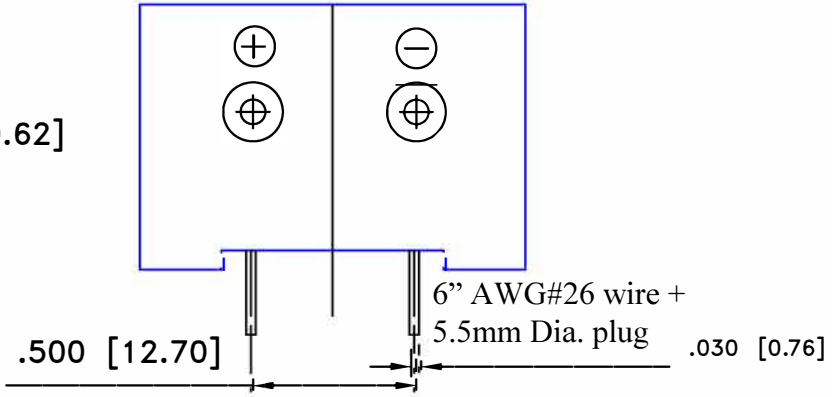

NOTE: ROHS 2 COMPLIANT

MOUNTING INSTRUCTION:
USE 2-56 MACHINE SCREWS OR EYELETS 0.089" OD BY 0.15" FLANGE STIMPSON GS-3 SERIES OR EQUIVALENT. ALSO ADHESIVES AND DOUBLE SIDED TAPES WORK WELL.

PART	DESCRIPTION	MATERIAL
TERMINALS	PC TERMINALS	TIN PLATED STEEL
WASHER	INSULATOR	RUBBER
HOLDER	HOLDER UL94V-0, FILE No. E56070 (S)	HIGH IMPACT ABS BLACK, UL940-0
CONTACTS	BRASS SNAPS	NICKEL PLATED BRASS

Tolerance (Except as noted)	
decimal ±.5 (.020)	
Fractional ± .8 (.030)	
Angular ± 3°	
Drawing Number	HH-3635