Mallory Sonalert Products Inc	Part # PSR37N45SK
Sales Outline Drawing	Revision **A**

Specifications:

Impedance (Ω)	45 ± 15% at 1500 Hz at 1.0 V
Rated Power (W)	0.2
Max Power (W)	0.4
Resonance Freq Fo (Hz)	480 ± 20% at 1.0V
Frequency Range (Hz)	Fo ~ 10000
Output S.P.L. (dB)	92 ± 3 at 0.2w/.1m 1.0k, 1.5k, 2.0k, 3.0kHZ 79 ± 3 at 1w/1m 1.0k, 1.5k, 2.0k, 3.0kHZ
Magnet Size (mm)	∅ 12.5 X 1.2H
Magnet	Nd-Fe-B
Frame Material	PBT
Operating Temp	-40 to 105°C
Weight (g)	9.3
Options	For other options contact factory

Dimensions: ±0.3 (units: mm) **ROHS Compliant**
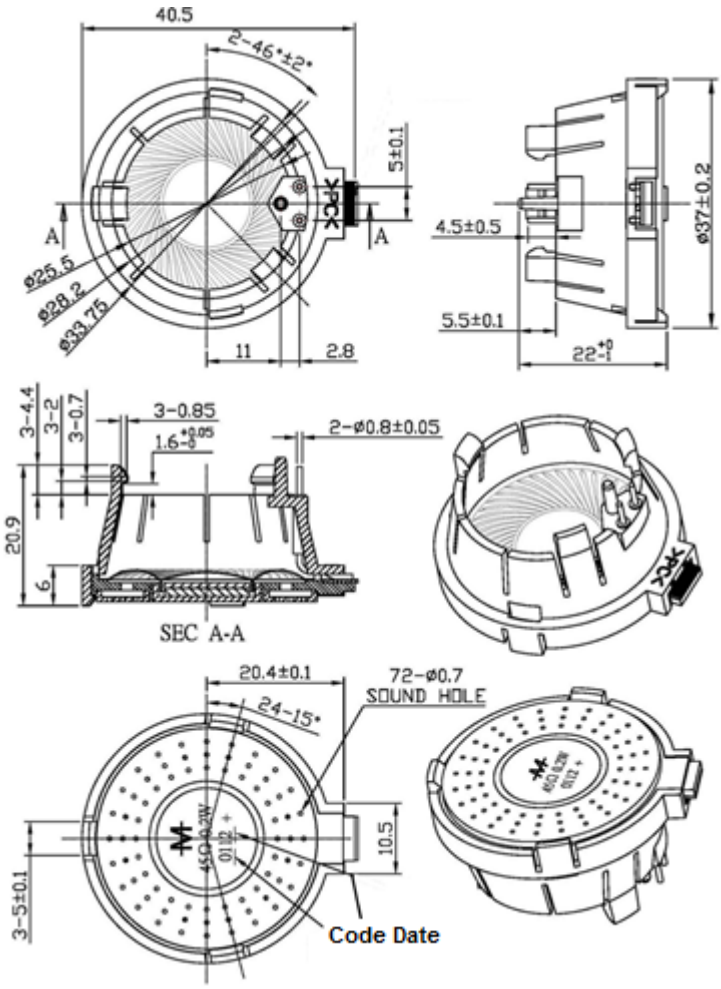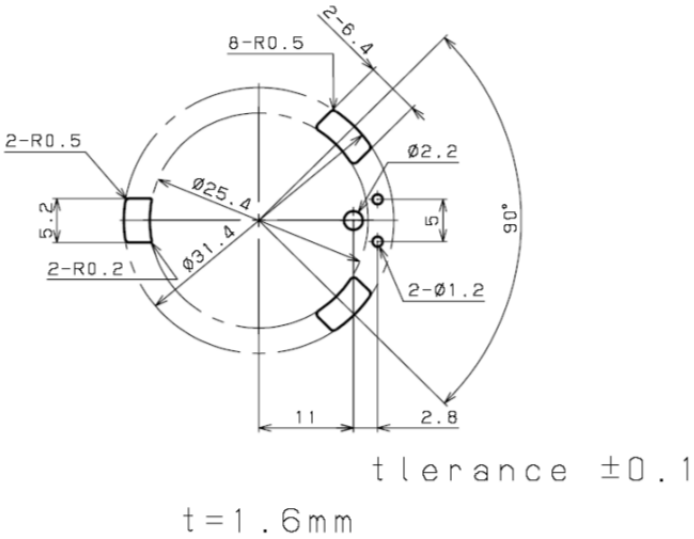
RECOMMENDED PCB LAYOUT