NOTES:
1. MATERIALS AND FINISHES:
   BODY - BRASS, GOLD PLATING
   CONTACT - BRASS, GOLD PLATING
   INSULATOR - LCP
2. ELECTRICAL:
   A. IMPEDANCE: 50 OHM
   B. FREQUENCY RANGE: DC - 18 GHz
   C. VSWR(RETURN LOSS): 1.10 (26 dB), MAX. DC - 6 GHz
   1.15 (23 dB), MAX. 6 - 10 GHz
   1.32 (17 dB), MAX. 10 - 18 GHz
   D. DIELECTRIC WITHSTANDING VOLTAGE: 500 VRMS, MIN.
3. PHYSICAL:
   A. DURABILITY: 1000 CYCLES MIN.
   B. ENGAGEMENT FORCE: 2 LB [9 N] MAX
   C. DISENGAGEMENT FORCE: 0.5 LB [2.2 N] MIN
   D. INNER CONTACT RETENTION FORCE: 1.5 LB [7 N] MIN
   E. TEMPERATURE RANGE: -65° C TO +165° C
4. PACKAGING:
   A. QUANTITY: SINGLE PACK
   B. MARK BAG OR TAG:
      AMPHENOL
      SMP-MSSB-PCT-1
      DATE CODE
      QTY

THIRD ANGLE PROJ.

REVISIONS

REV	DESCRIPTION	DATE	ECO	APPR
A	RELEASE TO MFG	8/31/06	46217	HP
B	INSULATOR WAS CHANGED	07-May-07	---	ANGELA
C	SYNCH THE DRAWING WITH DANBURY	07-Nov-12	49307	SH
D	SEE SHEET 1\RD-DM1309100 1J8	24-Sep-13	49741	MD

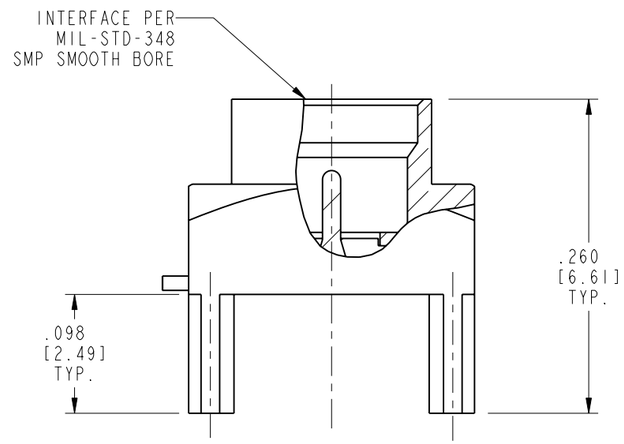

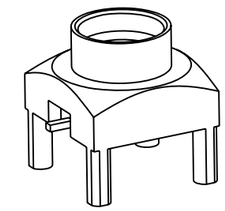

SCALE 4.000

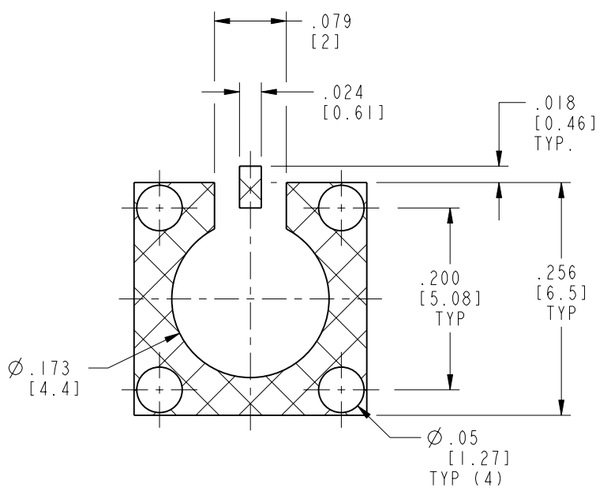

RECOMMENDED PCB PAD LAYOUT

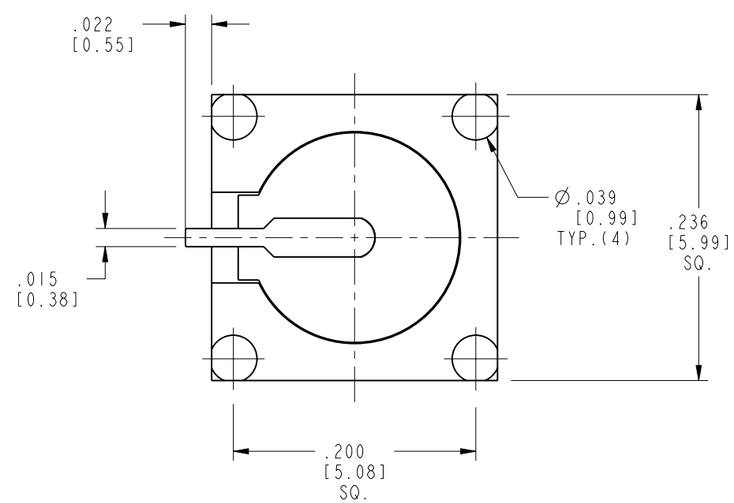

CUSTOMER OUTLINE DRAWING

ALL OTHER SHEETS ARE FOR INTERNAL USE ONLY

UNLESS OTHERWISE SPECIFIED, DIMENSIONS ARE IN INCHES AND TOLERANCES ARE:
2 PLACE DECIMAL ±.015 (0,381 mm) | 3 PLACE DECIMAL ±.005 (0,127 mm) | ANGLES ± 1°

NOTICE - These drawings, specifications, or other data (1) are, and remain the property of Amphenol corp. (2) must be returned upon request; and (3) are confidential and not to be disclosed to any person other than those to whom they are given by Amphenol Corp. the furnishing of these drawings, specifications, or other data by Amphenol Corp., or to any other person to anyone for any purpose is not to be regarded by implication or otherwise in any manner licensing, granting rights to permitting such holder or any other person to manufacture, use or sell any product, process or design, patented or otherwise, that may in any way be related to or disclosed by said drawings, specifications, or other data.

MATERIAL

REFERENCE EAR # 283

CONFIGURATION LEVEL:

FINISH

DRAWN J.CHEN	DATE 24-Sep-13	
ENGINEER H. PARIKH	DATE 23-Oct-12	
APPROVED S.HSIEH	DATE 27-Sep-13	
CAD FILE		

TITLE
SMP JACK, PIN CONTACT
PCB RECEPTACLE
SMOOTH BORE

SCALE: 8.0:1.0 | SHEET 2 OF 2

DWG SIZE B | REV D

Amphenol RF
www.amphenolrf.com

DRAWING NO. SMP-MSSB-PCT-1
ITEM NO. SMP-MSSB-PCT-1
PART NO. SMP-MSSB-PCT-1