NOTES:
1. MATERIALS AND FINISHES:
   BODY – BRASS, NICKEL PLATING
   CONTACT – BERYLLIUM COPPER,SILVER PLATING
   INSULATOR – PTFE, NATURAL
2. ELECTRICAL:
   A. IMPEDANCE: 50 OHM
   B. FREQUENCY RANGE: DC 0–11 GHz
   C. DIELECTRIC WITHSTANDING VOLTAGE: 1500 VRMS, MIN.
3. MECHANICAL:
   A. DURABILITY: 500 CYCLES MIN.
   B. TEMPERATURE RANGE: –40°C to +85°C

THIRD ANGLE PROJ.

REVISIONS

REV	DESCRIPTION	DATE	ECO	APPR
B	SEE SHEET 1	18–Aug–05	– –	ROCKY
B1	SEE SHEET 1	19–Sep–05	– –	ROCKY
T	REDRAWN TO UPDATE FORMAT	22-Dec-08	47238	[illegible]

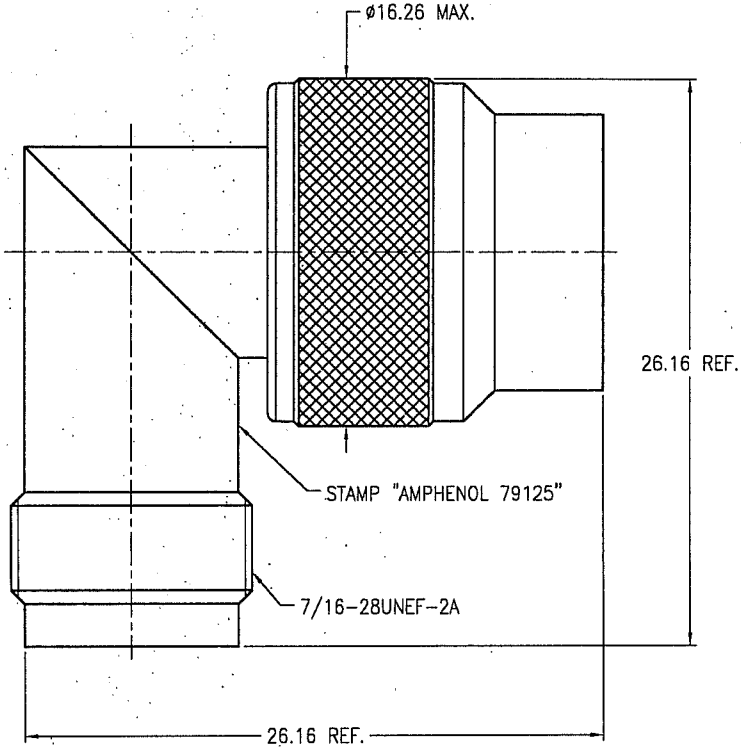

CUSTOMER OUTLINE DRAWING

ALL OTHER SHEETS ARE FOR INTERNAL USE ONLY

UNLESS OTHERWISE SPECIFIED, DIMENSIONS ARE IN METRIC AND TOLERANCES ARE:

0.5 – 6mm	6 – 30mm	30 – 120mm	ANGLES
±0.1mm	±0.2mm	± 0.3mm	±1°

NOTICE – These drawings, specifications, or other data (1) are, and remain the property of Amphenol Corp. (2) must be returned upon request; and (3) are confidential and not to be disclosed to any person other than those to whom they are given by Amphenol Corp. The furnishing of these drawings, specifications, or other data by Amphenol Corp., or to any other person to anyone for any purpose is not to be regarded by implication or otherwise in any manner licensing, granting rights or permitting such holder or any other person to manufacture, use or sell any product, process or design, patented or otherwise, that may in any way be related to or disclosed by said drawings, specifications, or other data.

MATERIAL

REFERENCE

FINISH

DRAWN	DATE
ROCKY	19–Sep–05
ENGINEER	DATE
SCOTT	19–Sep–05
APPROVED	DATE
SCOTT	19–Sep–05

CAD FILE: F:\DWG\CNPD\79125–TSZ

TITLE: TNC RIGHT ANGLE ADAPTOR

SCALE: 3/1	SHEET 2 OF 2	
DWG SIZE	CODE ID	REV
B	74868	T

Amphenol RF
Danbury CT USA, Tainan Taiwan, Shenzhen China
www.amphenolrf.com

DRAWING NO. 79125
ITEM NO. 79125
PART NO. 79125