PART No. 1418N4S16B6

for more information visit

www.hammfg.com

Data subject to change without notice

Isometric drawing Not to Scale

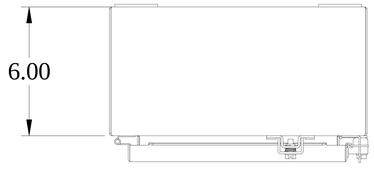

TOP VIEW

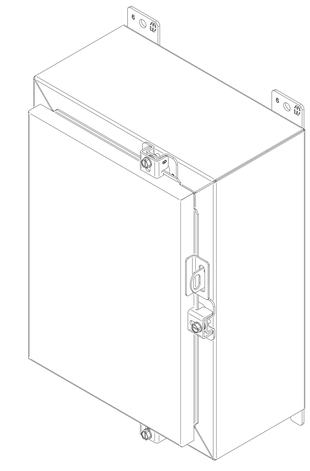

ISOMETRIC VIEW

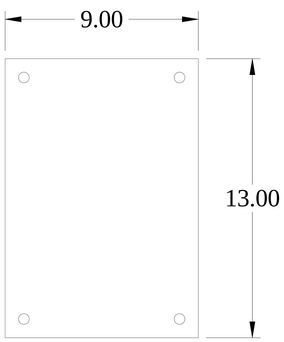

INNER PANEL

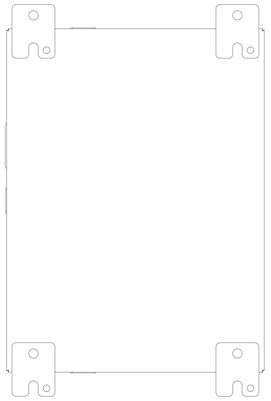

BACK VIEW

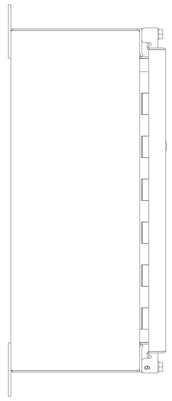

SIDE VIEW

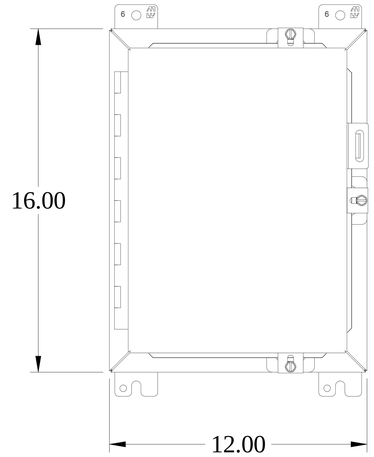

FRONT VIEW

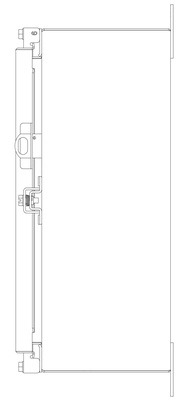

SIDE VIEW

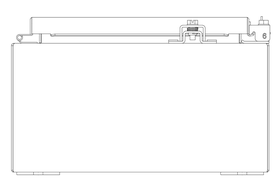

BOTTOM VIEW