THIS DRAWING IS UNPUBLISHED. RELEASED FOR PUBLICATION -,- .
© COPYRIGHT - BY TYCO ELECTRONICS CORPORATION. ALL RIGHTS RESERVED.

LOC	DIST
AJ	00

REVISIONS

P	LTR	DESCRIPTION	DATE	DWN	APVD
	W	REV PER ECO 08-009474	7/21/2008	DW	JL

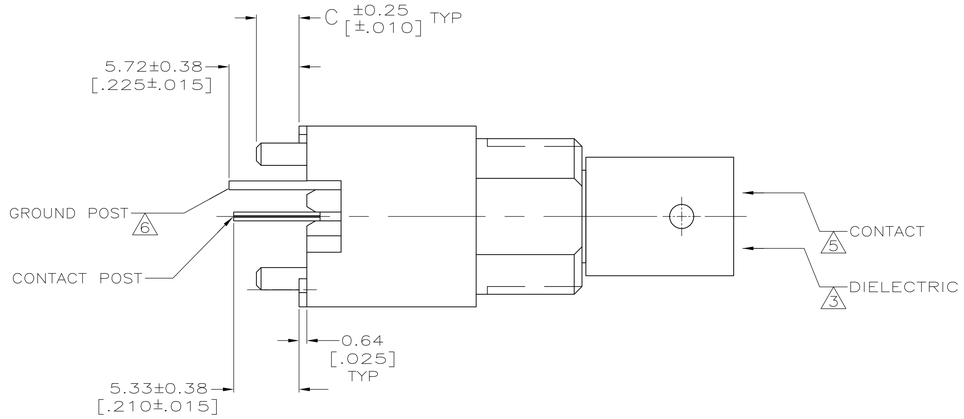

1. POLYESTER PBT PER MIL-M-24519, TYPE GPT-15F, UL94V-O RATED, COLOR:NATURAL
2. POLYESTER PBT PER MIL-M-24519, TYPE GPT-15F, UL94V-O RATED, COLOR:BLACK
3. POLYMETHYLPENTENE, GENERAL PURPOSE.
4. ZINC PER QQ-Z-363.
5. PHOSPHOR BRONZE PER QQ-B-750.
6. BRASS PER ASTM-B-453.
7. BRASS PER ASTM-B-16.
8. NICKEL PLATE PER QQ-N-290, 3.81 μm [.000150] MINIMUM THICK.
9. TIN PLATE PER ASTM-B-545, 3.81 μm [.000150] MINIMUM THICK.
10. GOLD PLATE PER MIL-G-45204, 0.76 μm [.000030] MINIMUN THICK.
11. SILVER PLATE PER QQ-S-365, 2.54 μm [.000100] MINIMUN THICK.
12. TIN PLATE PER ASTM-B-545, 3.81 μm [.000150] MINIMUM THICK.
13. SEE INSTRUCTION SHEET 2769.

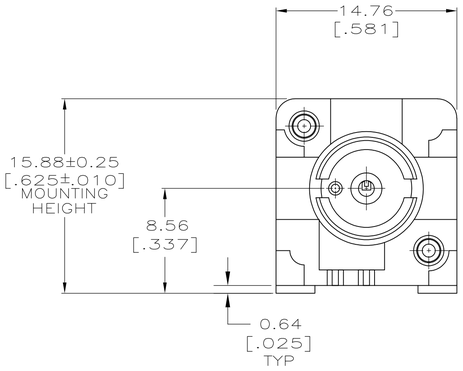

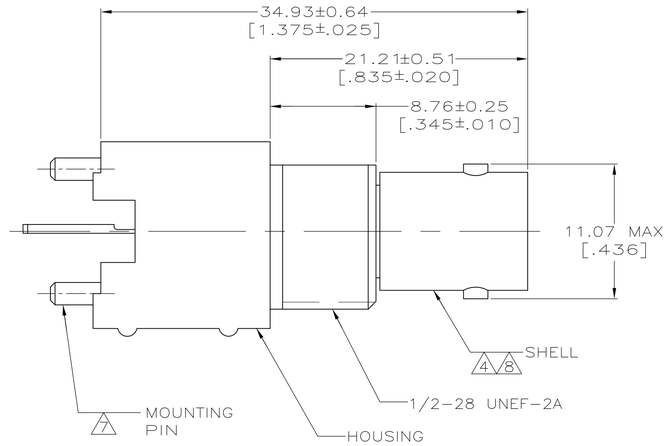

VIEW A

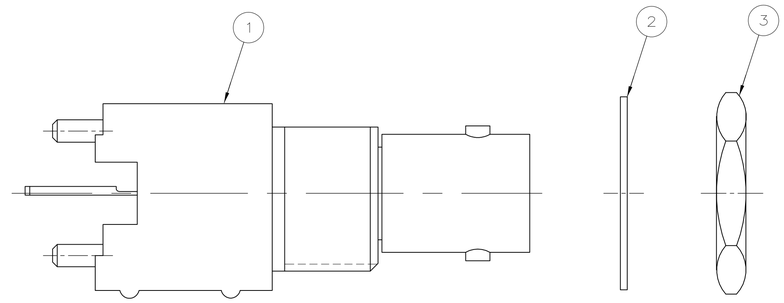

VIEW B

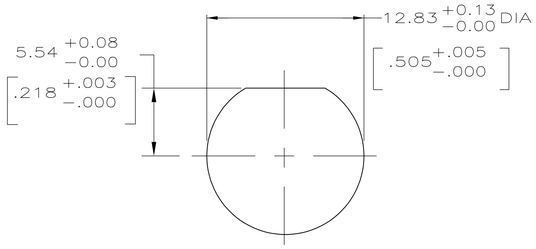

RECOMMENDED PANEL CUTOUT

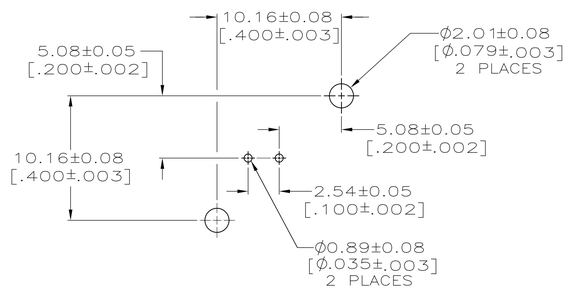

PCB CONFIGURATION

	C	MOUNTING PIN PLATING	GROUND POST PLATING	CONTACT POST PLATING	CONTACT PLATING	HOUSING MATERIAL	VIEW	3 JAM NUT QTY=1	2 LOCKWASHER QTY=1	1 ASSEMBLY QTY=1	PART NUMBER
OBSOLETE	3.48 [.137]	12	12	12	12	2	A	–	–	–	9-227222-1
OBSOLETE	3.48 [.137]	12	12	12	12	1	A	–	–	–	9-227222-0
OBSOLETE	–	9	9	9	–	–	B	1-329631-2	1-329632-2	227222-6	227222-9
OBSOLETE	1.85 [.073]	9	9	9	10	1	A	–	–	–	227222-8
SUPERSEDED BY 227222-1	–	9	9	9	–	–	B	1-329631-2	1-329632-2	227222-1	227222-7
	3.48 [.137]	9	9	9	10	2	A	–	–	–	227222-6
SUPERSEDED BY 227222-3	3.48 [.137]	9	9	9	11	1	A	–	–	–	227222-5
SUPERSEDED BY 227222-6	3.48 [.137]	9	9	9	11	2	A	–	–	–	227222-4
	3.48 [.137]	9	9	9	10	1	A	–	–	–	227222-3
	3.48 [.137]	9	9	9	9	2	A	–	–	–	227222-2
	3.48 [.137]	9	9	9	9	1	A	–	–	–	227222-1

THIS DRAWING IS A CONTROLLED DOCUMENT.

DIMENSIONS: INCHES

TOLERANCES UNLESS OTHERWISE SPECIFIED:
0 PLC ± –
1 PLC ± –
2 PLC ± 0.20 [.008]
3 PLC ± –
4 PLC ± –
ANGLES ± –

MATERIAL 1 2 3 4 5 6 7

FINISH 8 9 10 11 12

DWN	B.SCOTT	05-03-91
CHK	J. LIPPERT	6-11-91
APVD	J. LIPPERT	08-7-91
PRODUCT SPEC	108-12078	
APPLICATION SPEC	–	
WEIGHT	–	

Tyco Electronics

Tyco Electronics Corporation
Harrisburg, PA 17105-3608

NAME: JACK,VERTICAL, 50 OHM,PCB,SERIES BNC

SIZE	CAGE CODE	DRAWING NO	RESTRICTED TO
A1	00779	C-227222	–

CUSTOMER DRAWING | SCALE 4:1 | SHEET 1 OF 1 | REV W